University of Colorado Denver
Anschutz Medical Campus

Fitzsimons Building CRIO Renovation

13001 E. 17th PLACE
AURORA, CO 80045

006734.00
CONSTRUCTION DOCUMENTS
03/22/2022

CANNONDESIGN

2800 Walnut Street, Suite 300
Denver, CO 80205
P: 303.893.1990

BOSTON NEW YORK BALTIMORE WASHINGTON DC BUFFALO TORONTO COLUMBUS PITTSBURGH DALLAS
CHICAGO ST. LOUIS IRVINE DENVER HOUSTON LOS ANGELES MUMBAI

Consultants:

RMH Group, Inc.
Mechanical / electrical & Plumbing Engineers
12600 West Colfax Avenue, Suite A-400
Lakewood, Colorado 80215
303.239.0909

© 2019 The Cannon Corporation.
All rights reserved. No part of this document may be reproduced or used in any form without prior written authorization by The Cannon Corporation.
3/25/2022 12:28:44 PM

C:\Revit Local Files\006734.00_CUAMC_C1_AR_THeierCH.rvt

REFERENCE SYMBOLS (ARCHITECTURAL)

ROOM NAME AND NUMBER — OFFICE 1125 — ROOM NAME, ROOM NUMBER

PARTITION — A# 60MM — PARTITION TYPE, PARTITION MODIFIER, FIRE/SMOKE RATING

FOR MORE DETAIL SEE ***SHEET A1001***

STC TAG

INTERIOR DOOR ASSEMBLY — 1125A — ROOM NUMBER SERVED BY DOOR; SUFFIX ADDED IF MULTIPLE DOORS SERVE SAME ROOM

EXTERIOR DOOR ASSEMBLY — E101 — DENOTES EXTERIOR DOOR; NUMBERED SEQUENTIALLY

BORROWED LIGHT — 1125A — ROOM NUMBER; SUFFIX ADDED IF MULTIPLE OPENINGS SERVE SAME ROOM

EGRESS DOOR TAG — EW: 22" LOAD: 2100 CAP: 2500 — DOOR CLEAR WIDTH; OCCUPANT LOAD; OCCUPANT CAPACITY

EXTERIOR GLAZED OPENINGS — E45 — DENOTES EXTERIOR OPENING; NUMBERED SEQUENTIALLY

LOUVER — L10

SHEET NOTE — C1 — DEMOLITION; 2 — NEW CONSTRUCTION

CODE-REQUIRED SIGNAGE TAG — RS-1

ADA ACCESSIBLE CLEARANCES

KEYNOTE — 042000 - UNIT MASONRY — KEYNOTE SPECIFICATION SECTION. FOR ADDITIONAL INFORMATION REFER TO THIS SECTION IN **SPECIFICATION DOCUMENTS**; SPECIFIED ITEM

EQUIPMENT — PATIENT BED — EQUIPMENT DESCRIPTION; EQ-1 — EQUIPMENT IDENTIFIER

EXTERIOR ASSEMBLIES

FOR DETAILS, REFER TO SHEET **A0401**

ROOF ASSEMBLY TAG — RA-XX

SOFFIT ASSEMBLY TAG — SA-XX

EXTERIOR WALL ASSEMBLY TAG — SA-XX

MATERIALS AND FINISHES

FOR FINISH LEGEND, REFER TO SHEET **A1200**

FINISH TAG — F CPT-0 — FLOOR FINISH; W PNT-0 — WALL FINISH; B RES-0 — BASE FINISH

WALL FINISH TAG — P-3

MATERIALS

ACOUSTICAL CEILING

COMPRESSIBLE FILLER

ALUMINUM

BRICK

CONCRETE MASONRY UNIT

CONCRETE OR PRECAST

EARTH

FIBERGLASS/ SOLID SURFACE MATERIAL

FIBROUS BLANKET INSULATION (GLASS FIBER AND MINERAL WOOL)

FIBROUS BOARD INSULATION (GLASS FIBER AND MINERAL WOOL)

RIGID INSULATION

FINISHED WOOD

GRAVEL OR POROUS FILL

PLYWOOD — HORIZONTAL — VERTICAL

CORE MATERIAL

SPRAY INSULATION

SPRAY FIREPROOFING

STEEL OR IRON

STONE

TERRAZZO

WOOD FRAMING

WOOD BLOCKING OR SHIM

PLASTER AND GYPSUM BOARD

REFERENCE SYMBOLS (ALL DISCIPLINES)

WALL SECTION — 1 A0401 SIM — DETAIL/ SECTION NUMBER; "SIMILAR" INDICATION (WHERE APPLICABLE); SHEET NUMBER

BUILDING SECTION — 1 A0331 — 1 A0331 — DETAIL / SECTION NUMBER; SHEET NUMBER

DETAIL SECTION — 1/A0801 SIM — DETAIL NUMBER; SHEET NUMBER; "SIMILAR" INDICATION (WHERE APPLICABLE)

EXTERIOR ELEVATION — 3 SIM — A0301 — A0301 — ELEVATION NUMBER; "SIMILAR" INDICATION (WHERE APPLICABLE); SHEET NUMBER

INTERIOR ELEVATIONS — 2 A 3 — A0601 SIM — ELEVATION NUMBER; SHEET NUMBER; "SIMILAR" INDICATION (WHERE APPLICABLE)

LARGE SCALE BLOWUP OF PLAN OR DETAIL — DETAIL; "SIMILAR" INDICATION (WHERE APPLICABLE); SHEET NUMBER

LEVEL REFERENCE — LEVEL 02 118'-6" — LEVEL DESCRIPTION; LEVEL ELEVATION

NEW STRUCTURAL GRID — R — GRID REFERENCE; GRID LINE

EXISTING STRUCTURAL GRID — 2 — EXISTING GRID REFERENCE; EXISTING GRID LINE

MATCH LINE — 1 / A0101.A — 1 / A0101.B — SHEET NUMBER; MATCH LINE

REVISION — 1 — REVISION NUMBER (SHEET SPECIFIC); CLOUDED AREA OF REVISION

NORTH ARROW — N

SPOT ELEVATION — LEVEL 01 100'-0"

CENTERLINE

PLAN SYMBOLS

EXISTING CONSTRUCTION TO REMAIN

EXISTING CONSTRUCTION TO BE REMOVED

NEW CONSTRUCTION

INDICATES AREAS NOT IN CONTRACT

ABBREVIATIONS

AC	AIR CONDITIONING
ACR	ACRYLIC
ACC	ACCESSIBLE
ADJ	ADJACENT
AFF	ABOVE FINISHED FLOOR
AHU	AIR HANDLING UNIT
ALUM	ALUMINUM
ALT	ALTERNATE
AO	AUTOMATIC OPERATOR
APC	ACOUSTICAL PANEL CEILING
APPROX	APPROXIMATE
APS	ACOUSTICAL PLASTER SURFACING
ARCH	ARCHITECT(URAL)
ASN	ABRASIVE STAIR NOSING
AUTO	AUTOMATIC
AWP	ACOUSTICAL WALL PANEL
BTWN	BETWEEN
BLDG	BUILDING
BLKG	BLOCKING
BRG	BEARING
BSMT	BASEMENT
BR	BRICK
B/M	BOTTOM
C	COURSE
CFCI	CONTRACTOR FURNISHED - CONTRACTOR INSTALLED
CF	CONDUCTIVE FLOORING
CFMF	COLD-FORMED METAL FRAMING
CG	CORNER GUARD
CIP	CAST-IN-PLACE
CJ	CONTROL JOINT
CL	CENTERLINE
CLG	CEILING
CLO	CLOSET
CLR	CLEAR(ANCE)
CLRM	CLASSROOM
CMU	CONCRETE MASONRY UNIT
CO	CLEAN OUT
COL	COLUMN
COMM	COMMUNICATION
CONC	CONCRETE
CONF	CONFERENCE
CONT	CONTINUOUS
CONTR	CONTRACT(OR)
COORD	COORDINATE
CORR	CORRIDOR
CPT	CARPET(ING)
CR	CARD READER
CRL	CRASH RAIL
CT	CERAMIC TILE
CTB	CERAMIC TILE BASE
CUH	CABINET UNIT HEATER
CW	CASEWORK
DEMO	DEMOLISH / DEMOLITION
DEPT	DEPARTMENT
DF	DRINKING FOUNTAIN
DGL	INTERIOR DECORATIVE GLASS
DIA	DIAMETER
DIAG	DIAGONAL
DIM	DIMENSION
DN	DOWN
DS	DOWNSPOUT
DWP	DECORATIVE WALL PANEL
EA	EACH
EF	ENTRY FLOOR
EG	END GUARD
EIFS	EXTERIOR INSULATION FINISH SYSTEM
EJ	EXPANSION JOINT
EJC	EXPANSION JOINT COVER
ELEC	ELECTRIC(AL)
EL	ELEVATION
ELEV	ELEVATOR
EMB	ELECTRONIC MARKER BOARD
EMER	EMERGENCY
EOS	EDGE OF SLAB
EQ	EQUAL
EQUIP	EQUIPMENT
ER	EPOXY RESIN
EST	ESTIMATE(D)
EWC	ELECTRIC WATER COOLER
EXH	EXHAUST
EXIST	EXISTING
EXP	EXPANSION
EXPD	EXPOSED
EXT	EXTERIOR
FD	FLOOR DRAIN
FDTN	FOUNDATION
FLD	FLOOR DEFLECTION LINE
FE	FIRE EXTINGUISHER
FEC	FIRE EXTINGUISHER CABINET
FHC	FIRE HOSE CABINET
FIN	FINISH(ED)
FLM	FILM
FLR	FLOOR
FPRG	FIRE PROTECTION RATED GLAZING
FRP	FIBER REINFORCED PLASTIC
FRTW	FIRE RETARDED TREATED WOOD
FT	FOOT/FEET
FTG	FOOTING
FURN	FURNISH(ED) / FURNISHINGS
FWP	FABRIC WRAPPED PANEL
GA	GAUGE / GAGE
GALV	GALVANIZED
GFRC	GLASS FIBER REINF CONCRETE
GFRG	GLASS FIBER REINF GYPSUM
GL	GLASS
GLMU	GLASS MASONRY UNIT
GT	GROUT
GWB	GYPSUM WALL BOARD
GYP	GYPSUM
HDW	HARDWARE
HM	HOLLOW METAL
HO	HOLD OPEN
HORIZ	HORIZONTAL
HOSP	HOSPITAL
HP	HIGH POINT
HPC	HIGH PERFORMANCE COATING
HPS	HEADWALL PANEL SYSTEM
HR	HANDRAIL
HSS	HOLLOW STRUCTURAL SECTION
HT	HEIGHT
HVAC	HEATING-VENTILATING-AIR CONDITIONING
HWC	HIGH IMPACT WALL COVERING
HWP	HIGH IMPACT WALL PROTECTION
HWS	HIGH IMPACT WALL SHEET
IB	INTEGRAL BASE
ID	INSIDE DIAMETER
IGU	INSULATED GLASS UNIT
INST	INSTALL(ED)
INSUL	INSULATION / INSULATED
INT	INTERIOR
JAN	JANITOR
JT	JOINT
KIT	KITCHEN
LAB	LABORATORY
LAM	LAMINATE(D)
LAV	LAVATORY
LGT	LENGTH
LH	LEFT HAND
LP	LOW POINT
LT	LIGHT
LTWT	LIGHTWEIGHT
MACH	MACHINE
MAS	MASONRY
MATL	MATERIAL
MAX	MAXIMUM
MB	MARKER BOARD
MCM	METAL COMPOSITE MATERIAL
MDF	MDF PANELS
MECH	MECHANICAL
MES	METAL EDGE STRIP
MEZZ	MEZZANINE
MFR	MANUFACTURER / MANUFACTURED
MIN	MINIMUM
MISC	MISCELLANEOUS
MO	MASONRY OPENING
MPC	METAL PANEL CEILING
MSS	METAL SUSPENSION SYSTEM
MTL	METAL
MW	MILLWORK
NIC	NOT IN CONTRACT
NO	NUMBER
NOM	NOMINAL
NSMF	NON-STRUCTURAL METAL FRAMING
NTS	NOT TO SCALE
OC	ON CENTER
OD	OUTSIDE DIAMETER
OFCI	OWNER FURNISHED - CONTRACTOR INSTALLED
OFF	OFFICE
OFOI	OWNER FURNISHED - OWNER INSTALLED
OFVI	OWNER FURNISHED - VENDOR INSTALLED
OH	OVERHEAD
OPNG	OPENING
OPP	OPPOSITE
ORD	OVERFLOW ROOF DRAIN
PBD	PARTICLE BOARD
PCC	PRECAST CONCRETE
PCF	POUNDS PER CUBIC FOOT
PCONC	POLISHED CONCRETE
PERF	PERFORATE(D)
PHR	PHENOLIC RESIN PANEL
PL	PLATE
PLAM	PLASTIC LAMINATE
PLSHD	POLISHED
PLYWD	PLYWOOD
PNT	PAINT(ED)
PREFAB	PREFABRICATED
PREFIN	PREFINISHED
PSF	POUNDS PER SQUARE FOOT
PSI	POUNDS PER SQUARE INCH
PT	PORCELAIN TILE
PTB	PORCELAIN TILE BASE
PWC	PAINTED WALLCOVERING
QT	QUARRY TILE
QTB	QUARRY TILE BASE
QTY	QUANTITY
R	RISER
RAD	RADIUS
RAF	RESILIENT ATHLETIC FLOORING
RB	RESILIENT BASE
RBF	RUBBER FLOORING
RCP	REFLECTED CLG PLAN
RD	ROOF DRAIN
REF	REFER TO / REFERENCE TO
REFG	REFRIGERATOR
REINF	REINFORCED / REINFORCING
REQD	REQUIRED
RES	RESILIENT
REV	REVISE / REVISION
RF	RESILIENT FLOOR
RFG	ROOFING
RH	RIGHT HAND
RM	ROOM
RO	ROUGH OPENING
ROW	RIGHT OF WAY
RS	RESILIENT SHEET
RSN	RESILIENT STAIR NOSING
RST	RESILIENT STAIR TREAD
RT	RESILIENT TILE
RTU	ROOF TOP UNIT
RV	RIGID VINYL
S	SEALED
SCR	STATIC CONTROL RESILIENT FLOORING
SDF	STATIC DISSIPATIVE FLOORING
SECT	SECTION
SFRM	SPRAY-APPLIED FIRE RESISTIVE MATERIAL
SHR	SHOWER
SHT	SHEET
SIM	SIMILAR
SM	SPECIALIZED METAL
SOG	SLAB-ON-GRADE
SP	SAFETY PAD
SPF	SPRAY POLYEURATHANE FOAM
SPEC	SPECIFY / SPECIFICATION
SQ	SQUARE
SS	STAINLESS STEEL
SSB	STAINLESS STEEL BASE
SSM	SOLID SURFACE / SURFACING MATERIAL
SSMB	SOLID SURFACE BASE
ST	STONE
STB	STONE BASE
STC	SOUND TRANSMISSION CLASS
STD	STANDARD
STL	STEEL
STOR	STORAGE
STRUCT	STRUCTURE / STRUCTURAL
SUSP	SUSPENDED
SWC	SPECIAL WALL COATING
T	TREAD
TB	TACK BOARD
TBD	TO BE DETERMINED
TC	TRAFFIC COATING
TEMP	TEMPORARY
TEXT	TEXTURE
THK	THICK(NESS)
TLT	TOILET
TOS	TOP OF STEEL
TOW	TOP OF WALL
TP	TANGENT POINT
TR	TRANSITION STRIP
TS	TACKABLE SURFACE
TRSLT	TRANSLUCENT
TYP	TYPICAL
TZ	TERRAZZO
TZB	TERRAZZO BASE
T&G	TONGUE & GROOVE
UC	UNDERCOUNTER
UPH	UPHOLSTERY
UNO	UNLESS NOTED OTHERWISE
VAC	VACUUM
VCT	VINYL COMPOSITION TILE
VEST	VESTIBULE
VET	VINYL ENHANCED TILE
VIF	VERIFY IN FIELD
VTR	VENT THROUGH ROOF
VWC	VINYL WALL COVERING
WAF	WOOD ATHLETIC FLOORING
WC	WATER CLOSET
WCV	WALL COVERING
WD	WOOD
WDB	WOOD BASE
WDF	WOOD FLOORING
WDP	WOOD PANEL
WP	WORK POINT
WPC	WOOD PANEL CEILING
WPR	WALL PROTECTION
WS	WOOD STAIN
WT	WEIGHT
WTR	WINDOW TREATMENT

GENERAL NOTES

1. COMPLY WITH ALL APPLICABLE CODES, RULES AND REGULATIONS. UNIVERSITY IS ITS OWN AUTHORITY HAVING JURISDICTION AND PERMIT ARE ISSUED THRU THE CAMPUS BUILDING OFFICIAL. NO FEE FOR PERMITTING. ALL WORK MUST BE INSPECTED AND APPROVED BY CAMPUS BUILDING OFFICIAL.

2. CONTRACTOR SHALL VERIFY ALL CONDITIONS BEFORE COMMENCEMENT OF WORK AND REPORT ALL DISCREPANCIES TO THE OWNER AND ARCHITECT. THE DRAWINGS REFLECT CONDITIONS AS CAN REASONABLY INFERRED FROM VISIBLE CONDITIONS, OR FROM DRAWINGS & INFORMATION FURNISHED BY OWNER, BUT CANNOT BE GUARANTEED.

3. ALL PENETRATIONS OF FIRE RESISTIVE FLOORS OR WALLS SHALL BE PROTECTED BY MATERIALS AND INSTALLATION DETAILS THAT CONFORM TO UNDERWRITER LABORATORIES LISTING FOR RATED ASSEMBLIES.

4. ALL EXISTING FLOOR SLAB PENETRATIONS AT FLOOR OF WORK AND DECK ABOVE, ARE TO BE SEALED TO AVOID ANY AND ALL MIGRATION OF DUST, WATER, CONSTRUCTION DEBRIS, ETC. TO ADJACENT FLOORS. SEALS MUST MEET THE RATING REQUIREMENT OF THE FLOOR/DECK ASSEMBLY.

5. PROVIDE TEMPORARY DUST ENCLOSURES DURING ALL DEMOLITION AND CONSTRUCTION ACTIVITIES. CONTRACTOR TO COORDINATE LOCATIONS WITH PROJECT MANAGER. IF EXISTING WALLS ARE USED PENETRATIONS MUST BE SEALED TO CREATE A DUST PROOF ENCLOSURE.

6. MODIFICATIONS TO THE EXISTING MEP SYSTEMS MAY IMPACT ADJACENT SPACES OUTSIDE THE GENERAL SCOPE AREAS. ANY DISTURBANCE TO EXISTING CONDITIONS AND FINISHES MUST BE REPAIRED TO MATCH THE CONDITIONS PRIOR TO CONSTRUCTION IMPACTS. CONTRACTOR TO AFFECTED ADJACENT AREAS PRIOR TO SUBMITTING FINAL COST.

7. THE FACILITY IS OPERATIONAL. CONTRACTOR SHALL MAKE PROVISIONS FOR OWNER AND PUBLIC USE OF THE BUILDING AROUND THE CONSTRUCTION AREA. DELIVERIES, STAGING, STORAGE OF MATERIALS AND OTHER CONSTRUCTION RELATED ACTIVITIES SHALL BE COORDINATED WITH THE OWNER AND NOT ADVERSELY AFFECT THE BUILDING OPERATIONS. MATERIAL STORAGE AND DUMPSTER LOCATIONS MUST BE APPROVED BY THE OWNER.

8. CONSTRUCTION ACTIVITIES ARE NOT TO ADVERSELY IMPACT THE ADJACENT OCCUPIED SPACES, INCLUDING BUT NOT LIMITED TO FLOORS ABOVE OR BELOW. CONSTRUCTION RELATED ACTIVITIESWT THAT MIGHT AFFECT THIS AREA MUST BE COORDINATED WITH THE OWNER AND APPROVED BEFORE ANY WORK IS STARTED.

9. CONTRACTOR SHALL BE FAMILIAR WITH THE SITE AND IS RESPONSIBLE FOR INCORPORATING ALL REASONABLY INFERABLE CONDITIONS INTO THE WORK. NO CLAIM FOR ADDITIONAL COMPENSATION OR TIME BASED ON UNFAMILIARITY OF VISIBLE OR REASONABLY INFERABLE CONDITIONS, WILL BE CONSIDERED. CONTRACTOR WARRANTS TO THE OWNER THAT THE SITE AND EXISTING CONDITIONS HAVE BEEN FIELD VERIFIED PRIOR TO SUBMITTING A FINAL CONTRACT PRICE. DISCREPANCIES ARE TO BE REPORTED TO THE OWNER.

10. CONTRACTOR SHALL KEEP THE CONSTRUCTION SITE CLEAN, FREE AND CLEAR OF DEBRIS AND SHALL MINIMIZE AND CLEARLY MARK ALL PHYSICAL HAZARDS. EMERGENCY EGRESS PATHS MUST BE MAINTAINED AT ALL TIMES.

11. CONTRACTOR SHALL KEEP THE SITE SECURE AND FREE OF UNAUTHORIZED PERSONS, AND KEEP ALL EXPOSED, EXISTING CONDITIONS, SECURE FROM VANDALISM OR THEFT.

12. CONTRACTOR SHALL PROVIDE PROTECTION OF ALL FINISHED FLOORING AND WALLS FROM ONGOING CONSTRUCTION ACTIVITIES, OWNER EQUIPMENT AND FURNITURE INSTALLATIONS.

13. CONTRACTOR IS TO COMPLETE AND SUBMIT ALL UTILITY OUTAGE REQUESTS THAT AFFECT THIS AREA OF BUILDING TO OWNER'S PROJECT MANAGER WITHIN THE REQUIRED TIMELINES (FOR MINOR OUTAGES, THIS IS A MINIMUM OF SEVEN (7) WORKING DAYS PRIOR TO DATE WHEN WORK NEEDS TO TAKE PLACE, AND THIRTY (30) DAYS FOR MAJOR OUTAGES). ANY DEMOLITION/CONSTRUCTION WORK THAT AFFECTS EXISTING BUILDING UTILTIES WILL REQUIRE CU ANSCHUTZ APPROVED OUTAGE REQUEST.

SHEET INDEX

GENRERAL

SHEET NUMBER	SHEET NAME
G0000	COVER SHEET
G0001	DRAWING INDEX / SYMBOLS & ABBREVIATIONS

ARCHITECTURAL

SHEET NUMBER	SHEET NAME
A0101	FLOOR PLAN / ELEVATION / DETAILS

ELECTRICAL

SHEET NUMBER	SHEET NAME
E0000	ELECTRICAL LEGEND
E0001	ELECTRICAL SPECIFICATIONS
E0101	ELECTRICAL FLOOR PLANS
E0201	ELECTRICAL ONE-LINE DIAGRAM

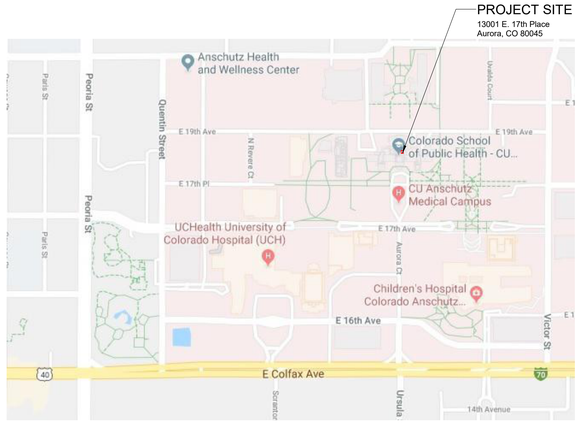

VICINITY MAP
6" = 1'-0"

REFLECTED CEILING PLAN SYMBOLS

CEILING HEIGHT — 9'-0" — HEIGHT OF CEILING ABOVE FINISHED FLOOR

LAY-IN PANEL

ACCESS DOOR

SURFACE OR RECESSED LUMINAIRE

PENDANT HUNG LUMINAIRE

UNDER-CABINET LUMINAIRE

FIRE ALARM SPEAKER — F

DAYLIGHT SENSOR

CEILING MICROPHONE — M

WIRELESS AP

PROJECTOR SCREEN

A/V PROJECTOR

AIR DEVICE - SUPPLY

AIR DEVICE - LINEAR SUPPLY

AIR DEVICE - RETURN

AIR DEVICE - EXHAUST

RADIANT PANEL

OCCUPANCY SENSOR — P

SMOKE DETECTOR — S

HEAT DETECTOR — H

MOTION / SECURITY DETECTOR — M

CAMERA

CLOCK — C

SPEAKER — S

WALL WASH LUMINAIRE

TRACK LIGHT

STRIP LUMINAIRE

COVE LUMINAIRE

WALL MOUNT STRIP

EXIT LUMINAIRE

SURGICAL LIGHT/ EQUIPMENT BOOM PENDANT

SPRINKLER HEAD

NURSE CALL DOME LIGHT — N

IV / CURTAIN TRACK

University of Colorado Anschutz Medical Campus

University of Colorado Anschutz Medical Campus

Fitzsimons Building CRIO Renovation

CANNONDESIGN
2800 Walnut Street, Suite 300
Denver, CO 80205
P: 303.893.1990

www.cannondesign.com

RMH Group, Inc.
Mechanical / electrical & Plumbing Engineers
12600 West Colfax Avenue, Suite A-400
Lakewood, Colorado 80215
303.239.0909

100% CONSTRUCTION DOCUMENT		22 MAR 2022
Rev.	Description	Date

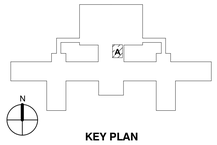

KEY PLAN

Drawing Title:

DRAWING INDEX / SYMBOLS & ABBREVIATIONS

Project No.: 006734.00 Checked by: Checker

G0001

© 2019 The Cannon Corporation
All rights reserved. No part of this document may be reproduced in any form or by any means without written authorization by The Cannon Corporation.
3/25/2022 12:21:02 PM

© 2019 The Cannon Corporation

C:\Revit Local Files\006734.00_CUAMC_C1_AR_THsiehCH.rvt

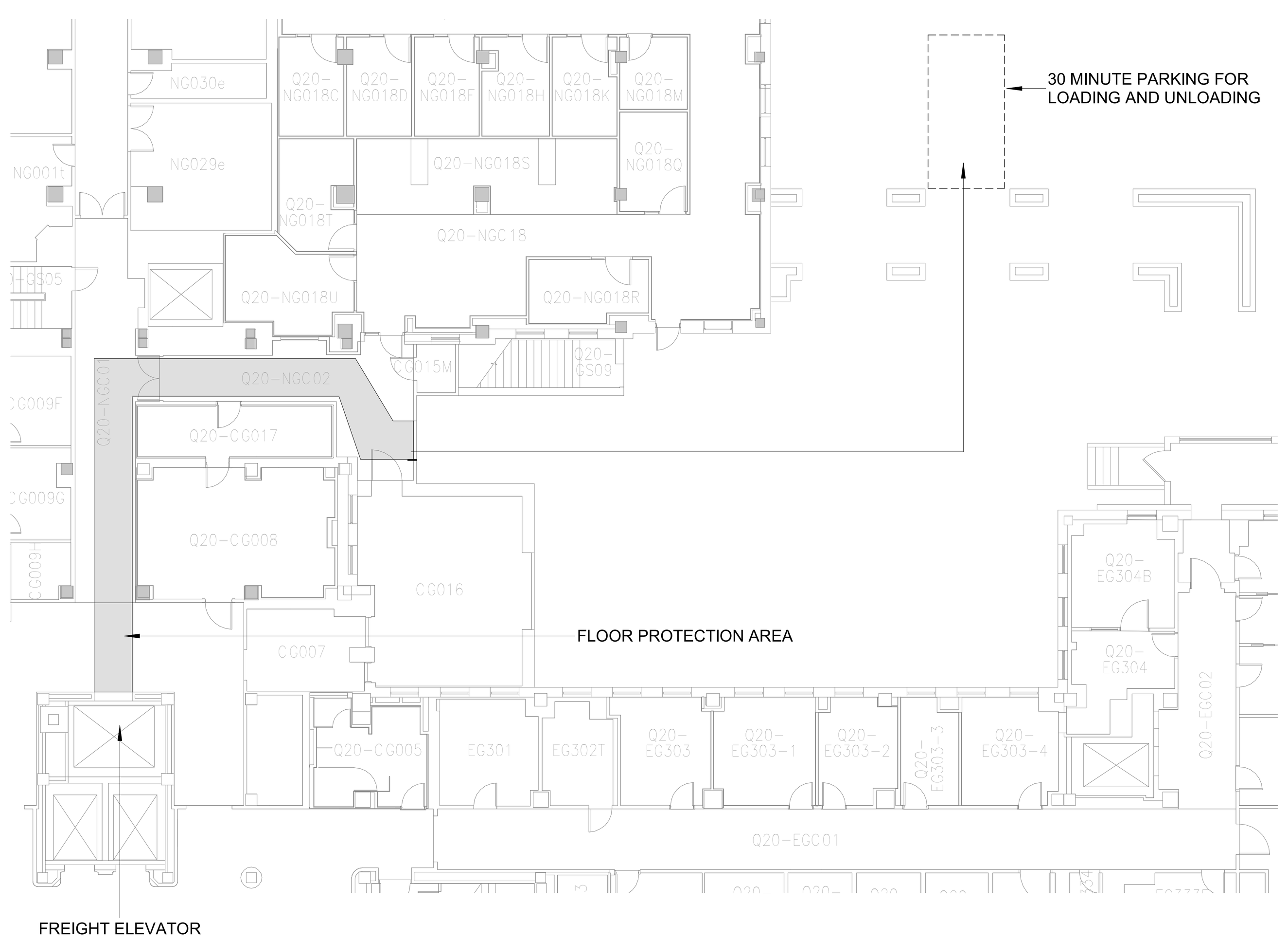

7 GROUND LEVEL
1/16" = 1'-0"

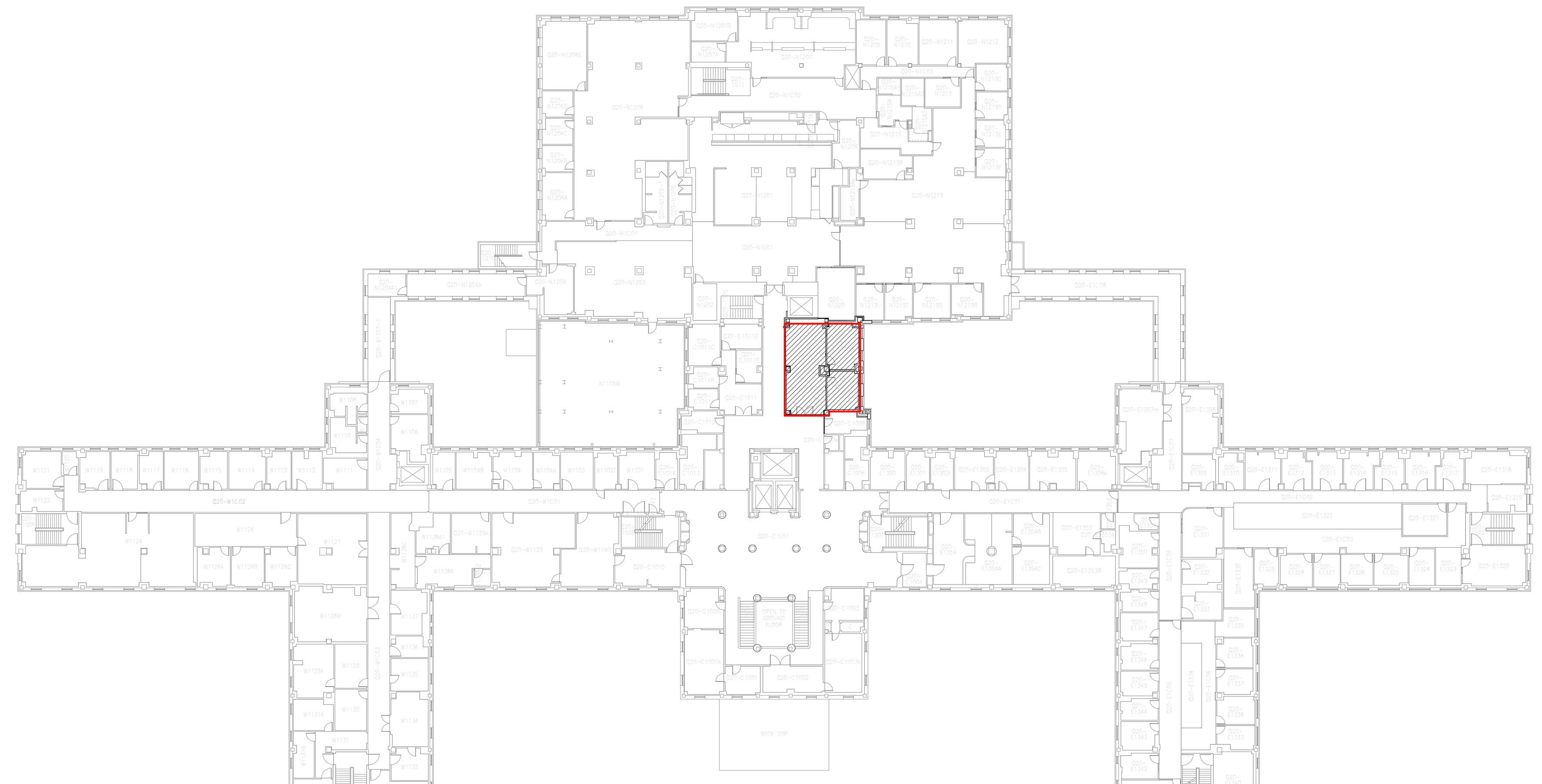

1 BUILDING 500 LEVEL 1 - KEY PLAN
1" = 40'-0"

GENERAL NOTES - DEMOLITION

1. DEMOLITION ACTIVITIES ARE NOT TO ADVERSELY IMPACT THE ADJACENT OCCUPIED SPACES, INCLUDING BUT NOT LIMITED TO FLOORS ABOVE OR BELOW. CONSTRUCTION RELATED ACTIVITIES THAT MIGHT AFFECT THIS AREA ARE TO BE COORDINATED WITH THE OWNER AND APPROVED BEFORE ANY WORK IS STARTED.

2. ALL EXISTING ITEMS TO REMAIN - WALLS, DOORS, ETC. - SHALL BE PROTECTED FROM DAMAGE DURING CONSTRUCTION. CONTRACTOR WILL BE RESPONSIBLE FOR REPAIR OR REPLACEMENT OF DAMAGE IN A MANNER SUITABLE TO OWNER. CONTRACTOR TO THOROUGHLY PHOTOGRAPH, FOR THE OWNER, THE EXISTING CONDITIONS BEFORE CONSTRUCTION COMMENCES.

3. ALL EXISTING FIREPROOFING/FIRE PROTECTION SYSTEMS SERVING OCCUPIED AREAS ARE TO BE PROTECTED DURING DEMOLITION, UON.

4. DRAWINGS ATTEMPT TO SHOW ALL FIXTURES, FURNISHINGS, AND EQUIPMENT TO BE REMOVED. HOWEVER, EXACT CONDITIONS MUST BE FIELD VERIFIED BY CONTRACTOR.

5. OWNER SHALL REMOVE ALL DESIRED FURNISHINGS, EQUIPMENT AND ACCESSORIES IN THE CONSTRUCTION AREA PRIOR TO DEMOLITION. UNLESS OTHERWISE NOTED IN THE CONSTRUCTION DOCUMENTS, ALL REMAINING FURNISHINGS, EQUIPMENT ACCESSORY ITEMS AND DEBRIS LEFT IN THE CONSTRUCTION AREA AT THE START OF DEMOLITION ACTIVITIES SHALL BE REMOVED AND PROPERLY DISPOSED OR SALVAGE FOR REUSE BY THE CONTRACTOR (SEE DEMOLITION SCOPE BELOW). THE GENERAL CONTRACTOR TO COORDINATE WITH OWNER THE START OF DEMOLITION ACTIVITIES SO THAT OWNER MAY COORDINATE INTERNALLY TO SALVAGE ALL DESIRED ITEMS.

6. CONTRACTOR SHALL PROTECT EXISTING TERRAZZO FLOORING, WALL SURFACES AND FREIGHT ELEVATOR DOORS, TRACK AND CAB SURFACES IN MAIN PUBLIC ELEVATOR LOBBY DURING ENTIRETY OF DEMOLITION AND MATERIAL REMOVAL ACTIVITIES (BOTH ON 1ST FLOOR AND GROUND FLOOR). FLOORING PROTECTION ALSO NEEDS TO BE INSTALLED FROM FREIGHT ELEVATOR TO CRIO PROJECT AREA, AND FROM FREIGHT ELEVATOR TO EXTERIOR DOOR ACCESS ON GROUND FLOOR WHERE DEMOLITION/WASTE MATERIALS ARE REMOVED.

7. COORDINATE W/ OWNER TO SALVAGE EXISTING, SECURITY & OIT EQUIPMENT BEFORE STARTING DEMOLITION.

8. ALL THE DEMO WASTE AND NEW FLOORING MATERIALS WILL USE THE TRAFFIC PATH OF GROUND FLOOR PLAN IN AND OUT OF THE BUILDING. THE GROUND FLOOR PLAN SHOWS THE AREA IN DASH LINE INDICATED THE SHORT-TERM (<30 MINUTE) PARKING FOR LOADING AND UNLOADING.

9. REMOVAL AND INSTALLATION OF CEILING TILES MUST BE COORDINATED TO MAINTAIN A COMPLIANT CEILING ASSEMBLY INCLUDING FIRE PROTECTION SYSTEMS DURING CONSTRUCTION.

DEMOLITION KEYED NOTES: (XX)

#	DESCRIPTION
A	REMOVE PORTIONS OF WALLS REQUIRED TO INSTALL FULL-HEIGHT GLASS SIDE LITE AND ITS NEW HEADER. PATCH ALL DISTURBED CONSTRUCTION TO MATCH ADJACENT EXISTING AND PAINT ALL WALLS AS INDICATED IN THE ROOM FINISH SCHEDULE.
B	COMPLETELY REMOVE CARPET FLOORING INCLUDING SETTING BED, MASTIC, ETC. PATCH/ REPAIR FLOOR/ WALL TO MATCH EXISTING SURFACES OR PREPARE TO RECEIVE NEW FINISH AS INDICATED IN THE ROOM FINISH SCHEDULE.
C	COMPLETELY REMOVE EXISTING RUBBER BASE TYPICAL WHERE CARPET REPLACEMENT OCCUR INCLUDING SETTING BED, EXPANSION JOINTS, ETC. PATCH/ REPAIR WALL TO MATCH EXISTING SURFACES AS INDICATED IN THE ROOM FINISH SCHEDULE.
D	EXISTING CEILING ASSEMBLY INCLUDING ALL HANGERS AND SUPPORTS, CEILING GRID, GWB SOFFIT, GRILLES, SPEAKERS, SMOKE DETECTORS, DIFFUSER, LIGHT FIXTURE AND SPRINKLER HEAD, ETC TO REMAIN IN PLACE.
E	REMOVE PORTION OF EXISTING DRYWALL FOR ACCESS TO NEW ELECTRICAL OUTLET OR SWITCH. REFER TO ELECTRICAL DRAWINGS FOR EXTENT AND ADDITIONAL INFORMATION.

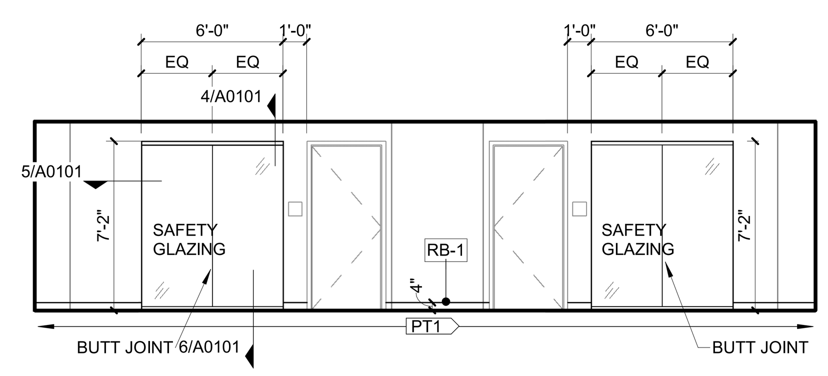

3 C1009 - EAST
3/16" = 1'-0"

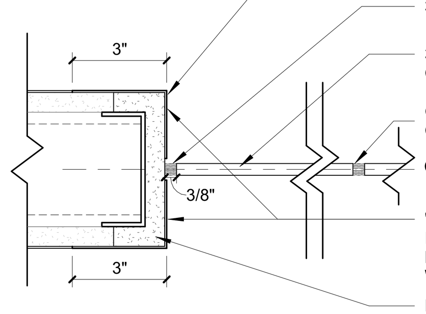

5 TYP BORROWED LIGHT JAMB DETAIL
3" = 1'-0"

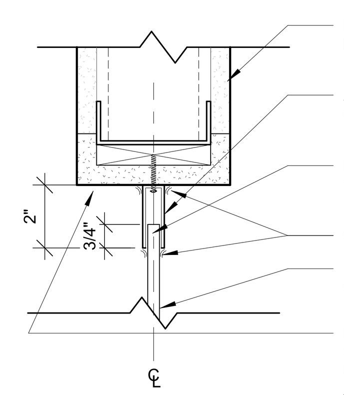

4 TYP BORROWED LIGHT HEAD DETAIL
3" = 1'-0"

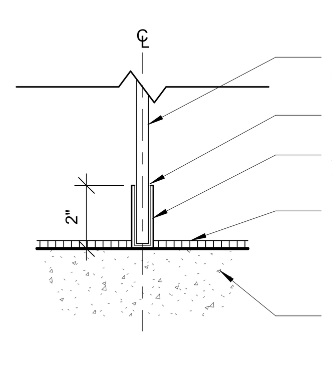

6 TYP BORROWED LIGHT SILL DETAIL
3" = 1'-0"

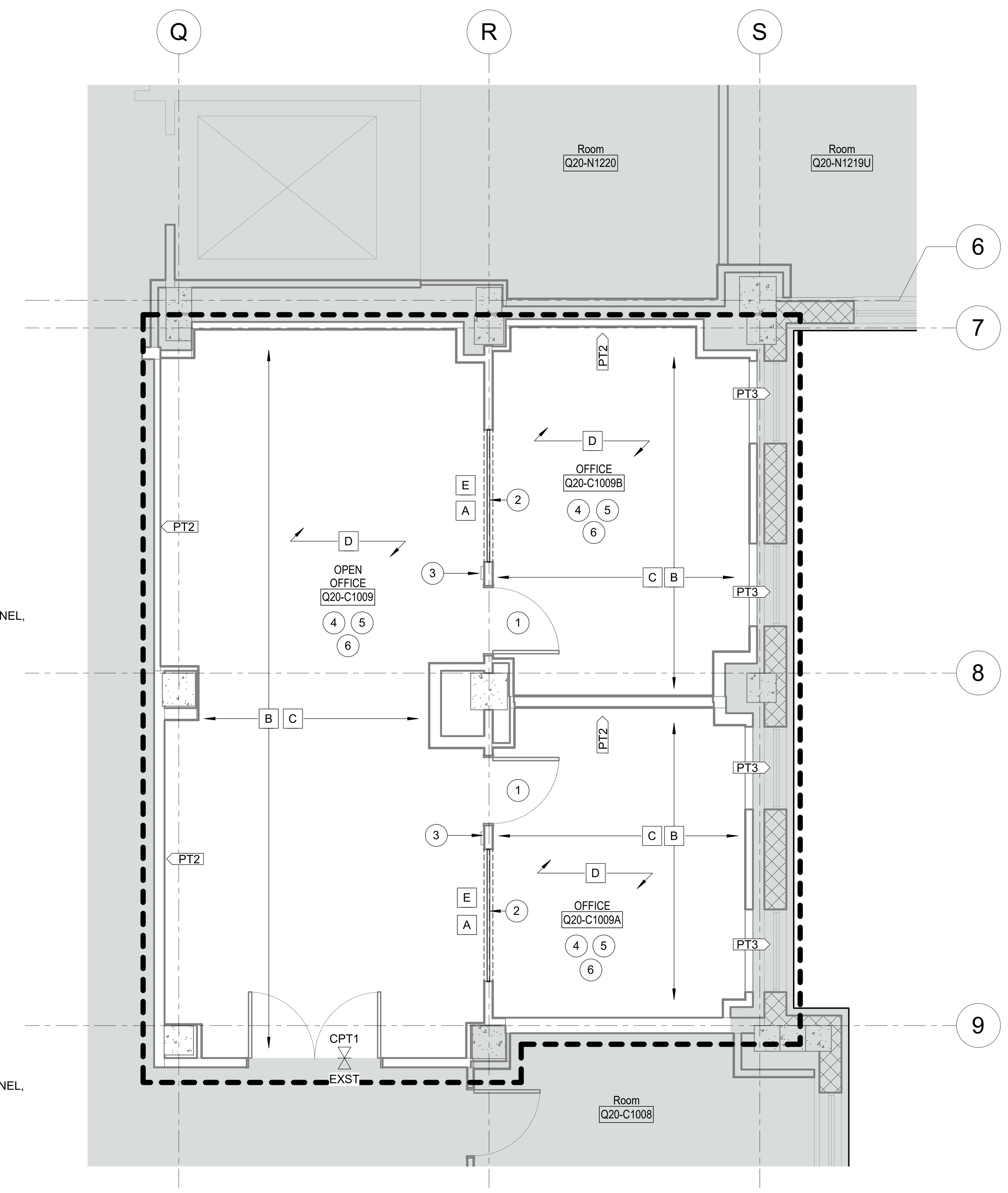

2 LEVEL 01 FLOOR PLAN
1/4" = 1'-0"

GENERAL NOTES - NEW CONSTRUCTION

1. CONDITIONS AND LOCATION OF EXISTING WALLS TO REMAIN MAY VARY DUE TO FIELD CONDITIONS. THE DRAWINGS REPRESENT THE DESIGN INTENT. ANY VARIATION TO THE DRAWINGS, DUE TO EXISTING CONDITIONS, MUST BE RESOLVED WITH THE ARCHITECT PRIOR TO PROCEEDING WITH CONSTRUCTION OF THE QUESTIONED AREA.

2. WHERE NEW WALL CONSTRUCTION ABUTS EXISTING, WALLS SHALL ALIGN ON BOTH SIDES.

3. PATCH ALL SURFACES TO MATCH EXISTING ADJACENT SURFACE WHERE DISTURBED BY NEW CONSTRUCTION, UNLESS OTHERWISE NOTED.

4. FLATTEN FLOOR THROUGHOUT EXISTING CONCRETE SLAB TO TOLERANCES REQUIRED FOR FINISH FLOOR INSTALLATION.

5. EXTENTS OF WORK BOUNDARY SHOWN THUS:

6. TYPICAL PAINT @ PERIMETER WALL ARE "PT1" UON. ACCENT PAINT COLOR FOR DRYWALL ARE "PT2" INDICATED ON PLAN.

7. PAINT - PROVIDE ACRYLIC LOW VOC PAINT BY SHERWIN-WILLIAMS WITH 20G/L FOR UNTINTED PAINT. PROVIDE ONE PRIMER COAT AND TWO FINISH COATS, MINIMUM, AND COMPLETE COVERAGE.

CONSTRUCTION KEYED NOTES (XX)

#	DESCRIPTION
1	EXISTING DOOR & HARDWARE TO REMAIN
2	REMOVE PORTION OF EXISTING WALL, PROVIDE NEW HEADER FOR FULL-HEIGHT GLASS SIDE LITE
3	EXISTING ROOM SIGNAGE TO REMAIN.
4	INSTALL NEW CARPET AND PROVIDE 4" RUBBER BASE
5	PATCH AND PAINT ALL EXISTING WALLS PER COLORS INDICATED
6	EXISTING GRID, MECHANICAL DIFFUSER, SPRINKLER, AND LIGHT FIXTURES TO REMAIN, REPLACE ACOUSTICAL TILE (ACT-1)

FINISH SCHEDULE

SPEC SECTION	Symbol	Type	Material	MANUFACTURER	STYLE	PRODUCT NUMBER	COLOR
ACOUSTICAL CEILING TILE							
095113	ACT-1	ACT-1	ACOUSTICAL CEILING TILE	ARMSTRONG	2'-0"X4'-0"X3/4"	Cirrus Second Look III #514	WHITE
BASE							
096513	RB-1	RB-1	BASE	ROPPE	4" TALL	BASIC TOE	CHARCOAL 123
CARPET							
096816	CPT-1	CPT-1	CARPET	Mannington Commercial	Crytogram 18"X36"	83377	Phoenix
PAINT							
099123	PNT-1	PNT-1	PAINT	SHERWIN WILLIAMS		SW 7028	Incredible White
099123	PNT-2	PNT-2	PAINT	SHERWIN WILLIAMS		SW 6678	Sunflower
099123	PNT-3	PNT-3	PAINT	SHERWIN WILLIAMS		SW 7028	Incredible White

NOTES:

1. ALL FINISH MATERIALS ARE PROVIDED & INSTALLED BY GC, RE: SPECIFICATIONS.

2. PAINTED ACCENT WALL "PT2" & PAINTED (E) WINDOW "PT3" AS INDICATED ON FLOOR PLAN, ALL OTHER WALLS ARE "PT1" TYPICAL

DEMOLITION WORK

1. PROVIDE AND MAINTAIN DUST PROOF ENCLOSURE AROUND AREA OF DEMOLITION AND CONSTRUCTION TO PREVENT SPREAD OF DUST, FUMES, AND SMOKE TO OTHER PORTIONS OF BUILDING.

2. COMPLETELY REMOVE ALL EXISTING ACT CEILING TILES THROUGHOUT THE WORK AREA

3. EXISTING GRID TO REMAIN THROUGHOUT THE WORK AREA

3. COMPLETELY REMOVE ALL EXISTING FLOOR FINISHES AND WALL BASE THROUGHOUT THE WORK AREA.

4. NO DISTRURBANCE OF LEAD PAINT ON EXISTING EXTERIOR WINDOWS. ANY LEAD ABATEMENT WILL BE IDENTIFIED AND HANDELED AT A LATER TIME AS NECESSARY.

DEMOLITION LEGEND

EXISTING TO BE DEMOLISHED

EXISTING WALL TO REMAIN

© 2019 The Cannon Corporation
All rights reserved. No part of this document may be reproduced or utilized in any form, without prior written authorization by The Cannon Corporation.

3/25/2022 12:21:00 PM

University of Colorado Anschutz Medical Campus

University of Colorado Anschutz Medical Campus

Fitzsimons Building CRIO Renovation

CANNONDESIGN
2800 Walnut Street, Suite 300
Denver, CO 80205
P: 303.893.1990

www.cannondesign.com

RMH Group, Inc.
Mechanical / electrical & Plumbing Engineers
12600 West Colfax Avenue, Suite A-400
Lakewood, Colorado 80215
303.239.0909

Rev.	Description	Date
	100% CONSTRUCTION DOCUMENT	22 MAR 2022

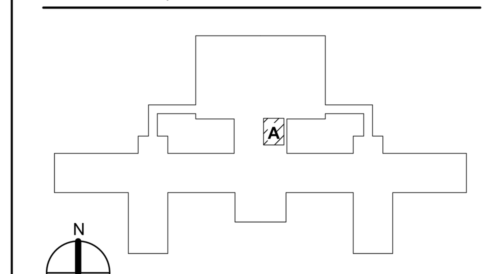

KEY PLAN

Drawing Title:

FLOOR PLAN / ELEVATION / DETAILS

Project No.: 006734.00 Checked by: Checker

A0101

© 2019 The Cannon Corporation.

ELECTRICAL LEGEND (NOTE: NOT ALL SYMBOLS SHOWN ARE USED ON THESE DRAWINGS)

– ONE LINE SYMBOLS –

SYMBOL	DESCRIPTION
	CIRCUIT BREAKER
	DRAW-OUT CIRCUIT BREAKER (MOLDED INSULATED CASE)
CB	DRAW-OUT POWER CIRCUIT BREAKER
	CONTROL FUSE
	FUSE WITH SWITCH
	SWITCH
PANEL XXX	PANELBOARD
ATS-XX XXX A	AUTOMATIC TRANSFER SWITCH
100A4G	FEEDER DESIGNATION, SEE FEEDER SCHEDULE
	AUTOMATIC TRANSFER SWITCH WITH BY-PASS
E	ENGINE GENERATOR
TE-XXXX	TRANSFORMER
	ENCLOSED BUSWAY
	GROUND BUS
	WEATHERHEAD
M	MOTOR
	DELTA CONNECTION
	WYE CONNECTION
	GROUNDED WYE CONNECTION
	GROUNDED WYE CONNECTION WITH RESISTOR GROUND
	GROUNDED WYE CONNECTION WITH REACTOR GROUND
M	METERING DEVICE
	CURRENT TRANSFORMER
	POTENTIAL TRANSFORMER
	LOAD-BREAK CONNECTOR
#	PROTECTIVE RELAY DEVICE
K	KEY INTERLOCK
2400V,100A, 10SEC. RESISTOR	RESISTOR
	CONTACT NORMALLY OPEN
	CONTACT NORMALLY CLOSED
	CAPACITOR
	SINGLE BATTERY
	MULTIPLE BATTERIES
	LIGHTNING ARRESTOR
	THERMAL ELEMENT, OVERLOAD RELAY

REV: 06/29/2020

COPYRIGHT, THE RMH GROUP, INC. 2021

– GENERAL –

SYMBOL	DESCRIPTION
	BRANCH CIRCUIT HOME RUN TO PANELBOARD, DESIGNATION INDICATES PANEL AND CIRCUIT NUMBERS
	CONTROL WIRING
	LIGHTING, ONE-LINE, AND POWER CIRCUITING
	LIGHTING, ONE-LINE, AND POWER CIRCUITING (UNDERGROUND)
	FLEXIBLE CONDUIT
	CONDUIT BREAK SYMBOL
	CONDUIT CAP
	CONDUIT CHANGE IN ELEVATION
	CONDUIT STUB DOWN (OUT OF DRAWING LIMITS)
	CONDUIT STUB UP (OUT OF DRAWING LIMITS)
J	JUNCTION BOX
J	WALL MOUNTED JUNCTION BOX
J	FLOOR MOUNTED JUNCTION BOX
	PUSH BUTTON A = ABORT DA = DURESS ALARM EPO = EMERGENCY POWER OFF IC = INTERCOM ST = SHUNT TRIP
S#X	SWITCH SYMBOL (#) SINGLE POLE (IF BLANK) 2 = DOUBLE POLE 3 = THREE-WAY 4 = FOUR-WAY AS = ADJUSTABLE SPEED D = DIMMER K = KEY OPERATED LV = LOW VOLTAGE M = MANUAL MOTOR SWITCH OS = OCCUPANCY SENSOR P = WITH PILOT LIGHT T = TIMER TO = THERMAL OVERLOAD VS = VACANCY SENSOR WP = WEATHERPROOF x = SMALL LETTER – LUMINAIRES CONTROLLED XP = EXPLOSION PROOF
SS	DUAL SWITCH
$	INTERCOM SWITCH

– FIRE ALARM DEVICES –

SYMBOL	DESCRIPTION
B	BELL
D	DUCT SMOKE DETECTOR
	FIRE FIGHTER'S TELEPHONE JACK
H	COMBINATION FIRE HORN/STROBE LIGHT
S	COMBINATION FIRE SPEAKER/STROBE LIGHT
	FIRE ALARM STROBE LIGHT
	FIRE ALARM STROBE, CEILING MOUNT
S	FIRE ALARM STROBE/SPEAKER, CEILING MOUNT
H	FIRE HORN
H	DUAL PROJECTION FIRE HORN
F	MANUAL PULL STATION
	MAGNETIC DOOR HOLD OPEN
D X	DETECTOR / DETECTOR UNDER FLOOR F = FLAME I = IONIZATION TYPE P = PHOTOELECTRIC TYPE T = THERMAL TYPE
B	BEAM DETECTOR
	PULL STATION/TELEPHONE JACK
D	DELUGE VALVE

– SPECIAL SYSTEMS DEVICES –

SYMBOL	DESCRIPTION
	DATA OUTLET
	COMBINATION TELEPHONE/DATA OUTLET
	TELEPHONE OUTLET
	TELEVISION JACK
	CEILING MOUNTED DATA OUTLET
	CEILING MOUNTED TELEPHONE/DATA OUTLET
	CEILING MOUNTED TELEPHONE OUTLET
	FLOOR MOUNTED DATA OUTLET
	FLOOR MOUNTED TELEPHONE/DATA OUTLET
	FLOOR MOUNTED TELEPHONE OUTLET
TTB	TELEPHONE TERMINAL BOARD
DTB	DATA TERMINAL BOARD
M	MICROPHONE OUTLET
S X	SPEAKER V = WITH INTEGRAL VOLUME CONTROL
S	WALL MOUNTED SPEAKER
V	WALL MOUNTED VOLUME CONTROL
C	CLOCK RECEPTACLE OUTLET
	SECURITY CAMERA
T	THERMOSTAT
XX	SPECIAL SYSTEMS SYMBOLS: AB = ABORT BUTTON AMP = AMPLIFIER ANN = ANNUNCIATOR ASD = ADJUSTABLE SPEED DRIVE ATS = AUTOMATIC TRANSFER SWITCH B = BUZZER BMS = BALANCED MAGNETIC STRIP CAM = CONTROL ADDRESSABLE MODULE CH = CHIME CK = CARD READER/KEYPAD CR = CARD READER DA = DURESS ALARM PUSH-BUTTON DC = DOOR CONTACT DE = DELAYED EGRESS DMA = DOOR MANAGEMENT ALARM DO = DOOR OPERATOR DS = DOOR STRIKE DTC = DATA TERMINAL CABINET DVR = DIGITAL VIDEO RECORDER EC = ELECTRICAL CONTACTOR EL = ELECTRIC LOCK ES = ELECTRIC STRIKE F = MANUAL PULL STATION FAA = FIRE ALARM ANNUNCIATOR FACP = FIRE ALARM CONTROL PANEL FS = FLOW SWITCH FSD = FIRE SMOKE DAMPER GB = GLASSBREAK DETECTOR HC = HANDICAP PUSH-BUTTON IC = INTERCOM CALL STATION IP = INDICATOR PANEL KP = KEYPAD MAM = MONITOR ADDRESSABLE MODULE MH = MANHOLE MD = MOTORIZED DAMPER MS = MOTION SENSOR ML = MAGNETIC LOCK NCMS = NURSE CALL MASTER STATION CM=CENTRALIZED PHYSIOLOGICAL MONITORING STATION NCT = NURSE CALL TERMINAL CABINET OS = OCCUPANCY SENSOR PA = PUBLIC ADDRESS PB = PULLBOX PIR = PASSIVE INFRARED DETECTOR PM = POWER QUALITY METER PS = PRESSURE SWITCH R = REMOTE INDICATING LIGHT RT = REMOTE TEST STATION RX = REQUEST TO EXIT PUSH-BUTTON S = WALL MOUNTED SPEAKER SAP = SECURITY ALARM PANEL SPD = SURGE PROTECTIVE DEVICE TC = TIME CLOCK TS = TAMPER SWITCH V = VARIABLE FREQUENCY DRIVE VM = VIDEO MONITOR VS = VACANCY SENSOR

– POWER –

SYMBOL	DESCRIPTION
	DUPLEX RECEPTACLE D = DEDICATED CIRCUIT IG = ISOLATED GROUND DEVICE Ⓣ = AUTOMATICALLY CONTROLLED RECEPTACLE
GFI	GFI = GROUND FAULT CIRCUIT INTERRUPTER
	FLOOR MOUNTED DUPLEX RECEPTACLE
	FLOOR MOUNTED FOURPLEX RECEPTACLE
	FLOOR MOUNTED SPECIAL PURPOSE RECEPTACLE
	CEILING MOUNTED DUPLEX RECEPTACLE
	CEILING MOUNTED FOURPLEX RECEPTACLE
	CEILING MOUNTED SPECIAL PURPOSE RECEPTACLE
	FOURPLEX RECEPTACLE
	RANGE RECEPTACLE
	SINGLE RECEPTACLE
	SPECIAL PURPOSE RECEPTACLE
	SWITCHED RECEPTACLE
	DUPLEX EMERGENCY/CRITICAL
	FOURPLEX EMERGENCY/CRITICAL
	DUPLEX-2PORT USB
	4PORT USB
	DISCONNECT SWITCH
	FUSED DISCONNECT SWITCH
	ENCLOSED CIRCUIT BREAKER
	MOTOR STARTER
	COMBINATION MOTOR STARTER
S	COMBINATION SWITCH AND RECEPTACLE
	CONDUIT SEAL OFF
	FIRE RATED POKE-THROUGH
	PARTITION CIRCUIT SPLIT
	POWER POLE
	SURFACE RACEWAY
M	METER

– NURSE CALL –

SYMBOL	DESCRIPTION
CB	CODE BLUE STATION
CP	CODE PINK STATION
EP	EMERGENCY CALL PULL STATION
SP	SINGLE PATIENT STATION
SA	STAFF ASSIST STATION
A	AUXILIARY INPUT STATION
DS	DUTY STATION
SS	STAFF STATION
B	BED INTERFACE STATION
2B	TWO BUTTON STATION
BM	BED MANAGEMENT STATION
D	DOME LIGHT
Z	ZONE LIGHT INTERSECTION
RL	REMOTE LOCATOR
PM	PATIENT MONITOR

– LIGHTING – (REFER TO LUMINAIRE SCHEDULE)

SYMBOL	DESCRIPTION
X * #	LUMINAIRES X = FIXTURE DESIGNATION # = BRANCH CIRCUIT NUMBER * = SWITCH LEG IDENTIFIER
	SHADING INDICATES LUMINAIRE ON LIFE SAFETY
	SHADING INDICATES PORTION OF LUMINAIRE ON LIFE SAFETY
	WALL MOUNTED LUMINAIRE
	STRIP LIGHT
	STRIP LIGHT WITH LIFE SAFETY
	POLE MOUNTED LUMINAIRE (QUANTITY OF LUMINAIRES PER POLE AS INDICATED ON PLANS)
	DOWNLIGHT LUMINAIRE
	WALL WASHER LUMINAIRE
	ADJUSTABLE LUMINAIRE
	PENDANT LUMINAIRE
	TRACK LIGHTING
P	PHOTOCELL
	EXIT LIGHT (WITH FACES AND DIRECTION ARROWS INDICATED)
	WALL MOUNTED EXIT LIGHT (WITH FACES AND DIRECTION ARROWS INDICATED)
	WALL MOUNTED BATTERY PACK EMERGENCY LIGHT

– GROUNDING SYMBOLS –

SYMBOL	DESCRIPTION
	GROUND TEST WELL
	GROUNDING CONDUCTOR
	LIGHTNING PROTECTION AIR TERMINAL
	BONDING POINT
	GROUND BAR
	ELECTRICAL GROUND
	GROUND ROD
	GROUND ROD WITH INSPECTION TEST WELL
	PIGTAIL

– EQUIPMENT –

SYMBOL	DESCRIPTION
	DISTRIBUTION PANEL
	EXISTING DISTRIBUTION PANEL
	NEW PANEL, FLUSH MOUNTED
	EXISTING PANEL, FLUSH MOUNTED
	NEW PANEL, SURFACE MOUNTED
	EXISTING PANEL, SURFACE
T	TRANSFORMER

– ABBREVIATIONS –

(E)	EXISTING
(N)	NEW
(PART)	PARTIAL CIRCUIT
A	AMP
AC	ABOVE COUNTER TOP
AF	AMP FRAME, AMP FUSE
AFF	ABOVE FINISHED FLOOR
AFG	ABOVE FINISHED GRADE
AHJ	AUTHORITY HAVING JURISDICTION
AIC	AMPS INTERRUPTING CAPACITY
AL	ALUMINUM
APL	APPLIANCE
AS	AMP SWITCH
AT	AMP TRIP
ATS	AUTOMATIC TRANSFER SWITCH
AV	AUDIOVISUAL
BJ	BONDING JUMPER
C	CONDUIT
CB	CIRCUIT BREAKER
CCT	CIRCUIT
CCTV	CLOSED CIRCUIT T.V.
CLG	CEILING
CU	COPPER
DISC	DISCONNECT
DIST	DISTRIBUTION
E/G	ENGINE/GENERATOR
ELEC	ELECTRIC, ELECTRICAL
ELEV	ELEVATOR ELEVATION
EM	EMERGENCY
EQPT	EQUIPMENT
F	FUSE
FA	FIRE ALARM
FAA	FIRE ALARM ANNUNCIATOR
FACP	FIRE ALARM CONTROL PANEL
FIXT	FIXTURE
FO	FIBER OPTIC
FLR	FLOOR
FLUOR	FLUORESCENT
G	GROUND (EQUIPMENT)
GEN	GENERATOR
GFI	GROUND FAULT CIRCUIT INTERRUPTER
GF	GROUND FAULT PROTECTION
GND	GROUND
HC	HANDICAPPED
HG	HOSPITAL GRADE
HP	HORSEPOWER
HV	HIGH VOLTAGE
INC	INCANDESCENT
IDF	INTERMEDIATE DISTRIBUTION FRAME
IG	ISOLATED GROUND
JB	JUNCTION BOX
LED	LIGHT EMITTING DIODE
LTG	LIGHTING
LV	LOW VOLTAGE
MATV	MASTER ANTENNA T.V.
MCB	MAIN CIRCUIT BREAKER
MCC	MOTOR CONTROL CENTER
MDF	MAIN DISTRIBUTION FRAME
MH	MANHOLE
MLO	MAIN LUGS ONLY
MOP	METHOD OF PROCEDURE
MTD	MOUNTED
MTG	MOUNTING
MTR	MOTOR
MV	MEDIUM VOLTAGE
N	NEUTRAL
NC	NORMALLY CLOSED
NEC	NATIONAL ELECTRICAL CODE
NF	NON-FUSED
NIC	NOT IN CONTRACT
NL	NIGHT LIGHT
NO	NORMALLY OPEN
OHE	OVERHEAD ELECTRIC
P	POLE
PA	PUBLIC ADDRESS
PB	PULL BOX
PH	PHASE
PNL	PANEL
PWR	POWER
RCPT(S)	RECEPTACLE(S)
SBC	STRANDED BARE COPPER
SPD	SURGE PROTECTIVE DEVICE
SW	SWITCH
TEL	TELEPHONE
TP	TAMPERPROOF
TV	TELEVISION
UF	UNDERFLOOR
UNO	UNLESS NOTED OTHERWISE
UPS	UNINTERRUPTIBLE POWER SUPPLY
V	VOLTAGE
VFD	VARIABLE FREQUENCY DRIVE
VP	VAPOR PROOF
W	WIRE
WG	WIRE GUARD
WP	WEATHERPROOF
XFMR	TRANSFORMER
XP	EXPLOSION PROOF

APPLICABLE CODES

AHJ: UNIVERSITY OF COLORADO ANSCHUTZ MEDICAL CENTER

FIRE AUTHORITY: AURORA FIRE

REMODEL ☒ NEW ☐

YEAR	CODE
2018	INTERNATIONAL BUILDING CODE
2018	INTERNATIONAL MECHANICAL CODE
2018	INTERNATIONAL PLUMBING CODE
2018	INTERNATIONAL ENERGY CONSERVATION CODE
2018	INTERNATIONAL FIRE CODE
2020	NATIONAL ELECTRICAL CODE

IS THE BUILDING FULLY SPRINKLERED? ☒ YES ☐ NO

IS THE BUILDING FULLY DETECTED? ☒ YES ☐ NO

– GRAPHIC SYMBOLS –

1	KEY NOTE
1	REVISION NUMBER
1	DETAIL NOTE
X	X = DENOTES ALL LUMINAIRES IN THE RESPECTIVE AREA ARE THE TYPE INDICATED, REFER TO LUMINAIRE SCHEDULE
TAG	PANEL FLAG
TAG	OWNER EQUIPMENT TAG
SQ X	LIGHTING CONTROL SEQUENCE INDICATION, SEE LIGHTING CONTROL SEQUENCE OF OPERATION SCHEDULE FOR INFORMATION X = DENOTES ILLUMINATION SET POINT
TAG	MECHANICAL EQUIPMENT TAG
	SHADING INDICATES EQUIPMENT
	HATCHING INDICATES ITEM(S) TO BE REMOVED
A100	ROOM NUMBER
	NORTH ARROW
1 E2.1	DETAIL BUBBLE DETAIL NUMBER SHEET NUMBER – WHERE DETAIL IS SHOWN
2 E2.2	SECTION CUT SECTION NUMBER/LETTER SHEET NUMBER – WHERE SECTION IS SHOWN

GENERAL NOTES

SPECIFICATIONS ARE A PART OF THE CONSTRUCTION DOCUMENTS. SHOULD ANY CONFLICT ARISE BETWEEN THE DRAWINGS AND SPECIFICATIONS, BRING SUCH CONFLICT TO THE ATTENTION OF THE ENGINEER FOR RESOLUTION. UNLESS OTHERWISE DIRECTED BY ENGINEER, THE MOST STRINGENT REQUIREMENT WILL PREVAIL.

DATA ON THE DRAWINGS IS AS EXACT AS COULD BE REASONABLY SECURED. ABSOLUTE ACCURACY IS NOT GUARANTEED. VERIFY EXACT LOCATIONS, MEASUREMENTS, LEVELS, SPACE REQUIREMENTS, POTENTIAL CONFLICTS WITH OTHER TRADES. ADAPT WORK TO ACTUAL CONDITIONS AT THE SITE. BEFORE SUBMITTING COSTS VISIT THE SITE TO BECOME THOROUGHLY FAMILIAR WITH THE ACTUAL CONDITIONS OF THIS PROJECT. THESE DRAWINGS ARE DIAGRAMMATIC IN NATURE; DO NOT SCALE. THESE DRAWINGS DO NOT SHOW MATERIALS FOR A COMPLETE INSTALLATION; PLAN THE INSTALLATION AND LAYOUT OF THE WORK AS DIAGRAMMED IN THESE DOCUMENTS. REFER TO FLOOR PLANS, SCHEMATICS AND DIAGRAMS OF OTHER TRADES FOR ELECTRICAL REQUIREMENTS. BRANCH CIRCUITS AND OTHER ELECTRICAL CONNECTIONS NOT INDICATED ON THESE DOCUMENTS.

FIRE-SEAL ALL PENETRATIONS THROUGH RATED WALLS AND FLOORS WITH MATERIALS CAPABLE OF PREVENTING THE PASSAGE OF FLAMES AND HOT GASES WHEN SUBJECTED TO THE REQUIREMENTS OF THE TEST STANDARD SPECIFIC FOR FIRE STOPS ASTM E814.

JUNCTION BOXES FOR LUMINAIRES AND OUTLETS ARE NOT INDICATED. PROVIDE THE PROPER NUMBER OF JUNCTION BOXES TO MEET LOCAL CODE AND NATIONAL ELECTRICAL CODE.

EXECUTE THE WORK IN ACCORDANCE WITH SUPPORTING OBJECTS FOR SEISMIC ZONE REQUIRED BY STATE AND LOCAL CODES ALL CEILING ATTACHED OBJECTS AND FLOOR ATTACHED EQUIPMENT INCLUDING, BUT NOT LIMITED TO: PENDANT LIGHTING FIXTURES, GENERAL LIGHTING, MULTIPLE RACEWAYS, GENERATOR, TRANSFORMER, ELECTRICAL SWITCHGEAR, SWITCHBOARDS AND OTHER ELECTRICAL EQUIPMENT.

WHERE DISCONNECTS ARE INDICATED ON DRAWINGS PROVIDE FINAL CONNECTION TO EQUIPMENT BEING SERVED BY DISCONNECT. DISCONNECTING MEANS FOR ALL MECHANICAL EQUIPMENT SHALL BE ACCESSIBLE AND HAVE THE CLEARANCE REQUIRED BY NEC.

UP-TO-DATE ELECTRICAL RECORD DRAWINGS ARE NOT AVAILABLE FOR THIS PROJECT. INFORMATION FOR EXISTING CIRCUITRY IS BASED ON EXISTING PANEL DIRECTORIES, AVAILABLE DRAWINGS, AND ASSUMPTIONS. LOCATIONS AND INFORMATION FOR EXISTING ELECTRICAL DEVICES AND EQUIPMENT SHOWN ON THESE DOCUMENTS ARE APPROXIMATE AND WERE DERIVED FROM FIELD OBSERVATION AND AVAILABLE RECORD DRAWINGS. VERIFY ACTUAL FIELD CONDITIONS PRIOR TO STARTING WORK.

University of Colorado Anschutz Medical Campus

University of Colorado Anschutz Medical Campus

Fitzsimons Building CRIO Renovation

CANNONDESIGN
2800 Walnut Street, Suite 300
Denver, CO 80205
P: 303.893.1990

www.cannondesign.com

RMH Group, Inc.
Mechanical / electrical & Plumbing Engineers
12600 West Colfax Avenue, Suite A-400
Lakewood, Colorado 80215
303.239.0909

COLORADO LICENSED PROFESSIONAL ENGINEER Charles Basil 55143 03/22/2022

Charles Basil

Digitally signed by Charles Basil
DN: C=US, E=cbasil@rmhgroup.com, O=RMH Group, INC., OU=RMH Group, INC., CN=Charles Basil
Reason: I am the author of this document
Date: 2022.03.22 10:04:38-06'00'

Rev.	Description	Date
	100% CONSTRUCTION DOCUMENTS	22 MAR 2022

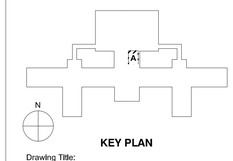

KEY PLAN

Drawing Title:

ELECTRICAL LEGEND

Project No.: 006734.00 Checked by: Checker

E0000

© 2019 The Cannon Corporation

C:\Revit Local Files\006734.00_CUAMC_C1_AR_THielnCH.rvt

© 2019 The Cannon Corporation
All rights reserved. No part of this document may be reproduced or utilized in any form or by any means without prior written authorization by The Cannon Corporation.
11/15/2021 10:25:27 AM

C:\Revit Local Files\006734.00_CUAMC_C1_AR_THsiehCH.rvt

PART 1 – GENERAL

1.1 IT IS THE INTENT OF THESE DOCUMENTS THAT A COMPLETE AND WORKABLE ELECTRICAL INSTALLATION IS PROVIDED FOR ALL THE ELECTRICAL PRODUCTS DESCRIBED, OR SHOWN AS BEING PART OF THIS CONTRACT. PROVIDE ALL MATERIALS AND LABOR TO FURNISH AND INSTALL ALL APPARATUS, MATERIALS, EQUIPMENT AND APPURTENANCES, IN A FASHION COMPLYING WITH ALL APPLICABLE CODES, INCLUDING ITEMS REQUIRED BUT NOT NORMALLY SHOWN, SUCH AS LAMPS, COUPLINGS, HANGERS, BRACKETS, CLAMPS, BOXES, CONNECTORS, HARDWARE, MISCELLANEOUS IRON AND STEEL, WELDING, COMMISSIONING AND TESTING. APPLY FOR AND PAY FOR ALL PERMITS, FEES, LICENSES AND INSPECTIONS FOR THIS DIVISION OF WORK.

1.2 PROVIDE ALL ELECTRICAL EQUIPMENT AND MATERIAL IN ACCORDANCE WITH REQUIREMENTS OF LOCAL BUILDING CODES, GOVERNING AUTHORITIES, AND AS SPECIFIED, WHERE A CONFLICT EXISTS BETWEEN ANY CODES AND THE WORK SHOWN WITHIN THESE DOCUMENTS, THE MORE STRINGENT REQUIREMENT SHALL GOVERN.

1.3 COMPLY WITH THE REQUIREMENTS OF THE GENERAL CONDITIONS, SUPPLEMENTAL GENERAL CONDITIONS OF THE PROJECT SPECIFICATIONS, ALL CONTRACT DOCUMENTS, AND ANY BASE BUILDING SPECIFICATIONS AND BUILDING CRITERIA INCLUDED IN THIS PROJECT.

1.4 DEFINITIONS

A. INSTRUCTIONS SUCH AS "PROVIDE" SHALL MEAN THE SAME AS THOUGH THE WORDS "THE CONTRACTOR SHALL" PRECEDE EACH SUCH INSTRUCTION.

B. "PROVIDE" SHALL MEAN "FURNISH AND INSTALL, COMPLETE AND READY FOR THE INTENDED USE."

1.5 COORDINATE AND SCHEDULE THE PROGRESS OF ELECTRICAL WORK TO CONFORM TO THE OWNER'S SCHEDULE AND THE PROGRESS OF THE WORK OF OTHER TRADES. FOR CONNECTIONS TO MECHANICAL EQUIPMENT AND THE ASSOCIATED CONDUIT AND WIRE REQUIRED BUT NOT SHOWN ON THESE DOCUMENTS, REFER TO THE MECHANICAL AND PLUMBING DOCUMENTS. COORDINATE ALL SUCH CONNECTIONS WITH THE AFFECTED TRADES.

1.6 PROVIDE A ONE YEAR WARRANTY ON ALL MATERIAL, EQUIPMENT, APPURTENANCES, AND INSTALLATION, FROM THE DATE OF ACCEPTANCE. IF, AFTER HAVING RECEIVED NOTICE FROM THE OWNER, DEFECTS ARE NOT CORRECTED WITHIN A REASONABLE TIME, THE OWNER WILL HAVE THE RIGHT TO SECURE THE NECESSARY WORK FROM ANOTHER PARTY AND TO BILL THE CONTRACTOR FOR THE COST OF SUCH WORK.

1.7 PROVIDE TEMPORARY LIGHTING AND POWER AS REQUIRED.

1.8 PERFORM THE WORK IN COOPERATION WITH THE AREA OCCUPANTS TO MINIMIZE INTERFERENCE WITH THEIR ACTIVITIES. WORK CAN BE PERFORMED DURING NORMAL WORKING HOURS. WHEN REQUIRED BY THE OWNER, PERFORM THE WORK DURING AFTERHOURS. SCHEDULE WORK A MINIMUM OF ONE WEEK IN ADVANCE.

1.9 VISIT THE PROJECT SITE BEFORE SUBMITTING A BID; NO EXTRAS WILL BE ALLOWED FOR LACK OF KNOWLEDGE OF EXISTING CONDITIONS. THESE DRAWINGS HAVE BEEN PREPARED BASED ON INFORMATION PROVIDED BY OTHERS. DATA PRESENTED ON THIS DRAWING IS AS ACCURATE AS CAN BE DETERMINED, BUT ACCURACY IS NOT GUARANTEED. THE ENGINEER IS NEITHER RESPONSIBLE FOR ACCURACY NOR ERRORS NOR OMISSIONS THAT MAY HAVE BEEN INCORPORATED INTO THESE DOCUMENTS. FIELD VERIFICATION OF ALL AFFECTED COMPONENTS IS REQUIRED.

1.10 THESE DRAWINGS ARE DIAGRAMMATIC IN CHARACTER AND DO NOT SHOW MATERIALS FOR A COMPLETE INSTALLATION. THESE DOCUMENTS INDICATE DESIRED LOCATIONS AND ARRANGEMENT OF ELECTRICAL COMPONENTS, CONDUIT RUNS, OUTLETS, AND EQUIPMENT; FOLLOW LOCATIONS AS CLOSELY AS POSSIBLE. TAKE ALL DIMENSIONS FROM ARCHITECTURAL DRAWINGS, CERTIFIED EQUIPMENT DRAWINGS, AND FROM THE STRUCTURE ITSELF BEFORE FABRICATING ANY WORK. PROPER JUDGEMENT MUST BE EXERCISED IN EXECUTING WORK TO SECURE THE BEST POSSIBLE INSTALLATION IN THE AVAILABLE SPACE AND TO OVERCOME LOCAL DIFFICULTIES DUE TO SPACE LIMITATIONS OR INTERFERENCE WITH STRUCTURAL OR ARCHITECTURAL CONDITIONS. PROVIDE ALL DEVIATIONS FROM THESE DOCUMENTS REQUIRED TO CONFORM TO THE STRUCTURE OR TO FIT THE INSTALLED WORK OF OTHER TRADES AND CONTRACTORS WITHOUT ADDITIONAL COST TO THE OWNER.

1.12 SUBMITTALS

A. SUBMIT SHOP DRAWINGS FOR ACCEPTANCE FOR LUMINAIRES, SWITCHBOARDS, PANELBOARDS, LIGHTING CONTROLS, DEVICES, AND ETC. AT COMPLETION OF WORK, DELIVER TO ARCHITECT/OWNER COMPLETED PROJECT RECORD DOCUMENTS MARKED WITH FIELD CHANGES; SUBMIT ALL MANUFACTURER'S DATA, HANDBOOKS, SCHEMATICS, ORDERING INFORMATION FOR ALL COMPONENTS.

B. REVIEW EACH SUBMITTAL AND CHECK FOR COORDINATION WITH OTHER WORK OF THE CONTRACT AND FOR COMPLIANCE WITH THE CONTRACT DOCUMENTS. NOTE CORRECTIONS AND FIELD DIMENSIONS. MARK WITH APPROVAL STAMP BEFORE SUBMITTING TO THE ARCHITECT AND CONSTRUCTION MANAGER.

C. STAMP EACH SUBMITTAL WITH A UNIFORM, APPROVAL STAMP. INCLUDE PROJECT NAME AND LOCATION, SUBMITTAL NUMBER, SPECIFICATION SECTION TITLE AND NUMBER, NAME OF REVIEWER, DATE OF CONTRACTOR'S APPROVAL, AND STATEMENT CERTIFYING THAT SUBMITTAL HAS BEEN REVIEWED, CHECKED, AND APPROVED FOR COMPLIANCE WITH THE CONTRACT DOCUMENTS.

D. COORDINATE PREPARATION AND PROCESSING OF SUBMITTALS WITH PERFORMANCE OF CONSTRUCTION ACTIVITIES. COORDINATE EACH SUBMITTAL WITH FABRICATION, PURCHASING, TESTING, DELIVERY, OTHER SUBMITTALS, AND RELATED ACTIVITIES THAT REQUIRE SEQUENTIAL ACTIVITY. COORDINATE TRANSMITTAL OF DIFFERENT TYPES OF SUBMITTALS FOR RELATED PARTS OF THE WORK SO PROCESSING WILL NOT BE DELAYED BECAUSE OF NEED TO REVIEW SUBMITTALS CONCURRENTLY FOR COORDINATION. ARCHITECT AND CONSTRUCTION MANAGER RESERVE THE RIGHT TO WITHHOLD ACTION ON A SUBMITTAL REQUIRING COORDINATION WITH OTHER SUBMITTALS UNTIL RELATED SUBMITTALS ARE RECEIVED.

1.13 RECORD DOCUMENTS

A. MAKE CAREFUL REVIEW AND INVESTIGATION TO DOCUMENT THE EXISTING BRANCH CIRCUIT LAYOUT AND OUTLET LOCATIONS FOR THE FOLLOWING SYSTEMS: LIGHTING, RECEPTACLES, MOTORS, EMERGENCY SYSTEMS, ACCESS CONTROLS (POWER ONLY), SECURITY SURVEILLANCE SYSTEMS (POWER ONLY), AND THE BRANCH CIRCUITS PROVIDING POWER TO ANY OTHER COMPONENTS IN THE REQUIRED FLOORS.

B. INCLUDE DOCUMENTATION OF OUTLET LOCATION AND TYPE, BRANCH CIRCUIT, CONDUCTOR AND RACEWAY SIZE. EXECUTE DOCUMENTATION UPON DOCUMENTS PROVIDED BY THE ENGINEER, WHICH WILL INDICATE THE BEST KNOWN "AS-BUILT" CONDITIONS OF THE LIMITS OF WORK. MAKE DOCUMENTATION LEGIBLE, COMPLETE, WITH A DATE AND SIGNATURE OF THE RESPONSIBLE INDIVIDUAL DESIGNATED BY THE CONTRACTOR.

C. PERFORM THE WORK USING CIRCUIT TRACING DEVICES THAT DO NOT REQUIRE ANY INTERRUPTIONS OR INTERFERENCE WITH THE POWER ON THE SYSTEM.

D. DOCUMENT ALL PANEL SCHEDULES ON AN APPROVED FORM. AFTER REVIEW AND AUTHORIZATION BY THE ENGINEER, PROVIDE TYPEWRITTEN PANEL DIRECTORIES FOR ALL PANELBOARDS ON THE INDICATED FLOORS. FOR EACH PANELBOARD SCHEDULE INDICATE THE FOLLOWING: FEEDER SIZE, MATERIAL, ORIGIN AND CONDUIT SIZE; BUS SIZE AND MATERIAL; MAIN BREAKER SIZE; PANEL TYPE; BOLT-ON OR PLUG-IN TYPE BREAKERS; SHORT CIRCUIT RATING; BREAKER SIZES AND POLE DESIGNATION; QUANTITY OF BREAKER SPACE.

PART 2 – MATERIALS

2.1 MATERIALS SHALL BE NEW AND IN PERFECT CONDITION; ALL MATERIALS FOR SIMILAR USES SHALL BE OF THE SAME TYPE, MATERIAL, AND MANUFACTURER. MATERIALS SHALL BE LISTED BY A RECOGNIZED NRTL OR BEAR A UL LABEL WHERE SUBJECT TO SUCH APPROVAL AND COMPLY WITH ANSI, IEEE AND NEMA STANDARDS. MAKE PROVISIONS FOR SAFE DELIVERY AND SECURE STORAGE OF ALL MATERIALS.

2.2 CONNECTORS AND FITTINGS SHALL BE MANUFACTURED BY APPLETON, STEEL CITY, T & B, TOMIC, RACO, OR O.Z./GEDNEY.

2.3 CONDUITS SHALL BE RIGID STEEL, INTERMEDIATE METAL CONDUIT, ELECTRICAL METALLIC TUBING, FLEXIBLE METALLIC CONDUIT, LIQUID TIGHT FLEXIBLE CONDUIT, NON-METALLIC, REINFORCED THERMOSETTING RESIN CONDUIT, AND RIGID PVC SCHEDULE 40. UNLESS SPECIFICALLY SHOWN TO BE LARGER, ALL CONDUITS SHALL BE SIZED PER THE NEC.

2.4 SURFACE RACEWAYS SHALL BE WIREMOLD OR APPROVED EQUAL. ALL WIREMOLD G-3000, G-4000, G-6000, RACEWAYS TO INCLUDE DIVIDER TO SEPARATE POWER FROM TELECOM AND DATA. PROVIDE EXPANSION JOINTS IN ACCORDANCE WITH MANUFACTURER'S RECOMMENDATIONS.

2.5 LOW-VOLTAGE ELECTRICAL POWER CONDUCTORS AND CABLES

A. CONDUCTORS SHALL BE MANUFACTURED BY ALPHA, CAROL BRAND, COLONIAL, TRIANGLE, ENCORE, GENERAL CABLE, OKONITE, SENATOR, OR SOUTHWIRE.

B. CONDUCTORS SHALL BE COPPER, 600 V, TYPE THW, THWN, OR THHN. CONDUCTORS #10 AND SMALLER SHALL BE SOLID; #8 GAUGE AND LARGER SHALL BE STRANDED. MINIMUM WIRE SIZE SHALL BE #12; EXCEPT USE #14 FOR CONTROL WIRING. CONDUCTORS #1/0 AND LARGER SHALL BE THW, THWN, XHHW, OR RHW-USE. THE USE OF ALUMINUM CONDUCTORS IS PROHIBITED.

C. CONDUCTORS #1 AND SMALLER SHALL HAVE A MINIMUM 60°C RATING. FOR WET LOCATIONS, AND WHERE DERATED DUE TO HIGH AMBIENT TEMPERATURE, PROVIDE CONDUCTORS SUITABLE FOR WET LOCATIONS WITH MINIMUM 90°C RATING.

D. SIZE AND INSTALL ALL CONDUCTORS PER THE NEC.

E. INCREASE CONDUCTOR SIZE AS NECESSARY TO LIMIT BRANCH CIRCUIT VOLTAGE DROP TO 3%; AND SERVICE/FEEDER VOLTAGE DROP TO 2%.

F. WIRE CONNECTIONS:
1. PROVIDE CONNECTORS, LUGS, AND DEVICES RATED FOR 75°C.
2. MAKE CONNECTIONS FOR WIRE #8 AWG AND SMALLER WITH TWIST-ON WIRE CONNECTORS.
3. MAKE CONNECTIONS FOR WIRE #6 AWG AND LARGER WITH PROPERLY SIZED SOLDERLESS LUGS OR CONNECTORS.

2.6 GROUNDING AND BONDING

G. GROUNDING CONDUCTOR MATERIAL: COPPER.

H. EQUIPMENT GROUNDING CONDUCTORS: INSULATED WITH GREEN-COLORED INSULATION PER COLOR CODING OF PHASE CONDUCTORS PARAGRAPH.

I. GROUNDING ELECTRODE CONDUCTORS: STRANDED CABLE.

J. UNDERGROUND CONDUCTORS: BARE, TINNED, STRANDED, UNLESS OTHERWISE INDICATED.

2.7 RACEWAYS AND BOXES FOR ELECTRICAL SYSTEMS

A. MANUFACTURERS: BOXES SHALL BE MANUFACTURED BY APPLETON, RACO, STEEL CITY, OR THOMAS & BETTS CO.

B. OUTLET BOXES:
1. FLUSH-MOUNTED OUTLET BOXES SHALL BE GALVANIZED OR ZINC COATED, PRESSED STEEL OUTLET BOXES. BOXES SHALL BE MINIMUM 4-INCHES SQUARE AND OF DEPTH REQUIRED; 1-1/2 INCHES MINIMUM BOX DEPTH. PROVIDE OUTLET BOXES OF PROPER TYPE AND DESIGN FOR THE PARTICULAR LUMINAIRE OR DEVICE TO BE INSTALLED.
2. PROVIDE SINGLE OR DOUBLE GANG MUD RING, AS REQUIRED BY THE DEVICE.
3. PROVIDE 3/8-INCHES NO-BOLT LUMINAIRE STUDS.

C. SURFACE-MOUNTED BOXES SHALL BE CAST METAL, MULTI-GANG AND OF DEPTH REQUIRED.

D. ALL PULL BOXES SHALL BE CODE GAUGE METAL, UNLESS OTHERWISE SHOWN ON THE DRAWINGS.

E. DATA/NETWORK: EMPTY CONDUIT SYSTEM WITH PULL WIRE AND BACK BOXES. BACK BOXES SHALL BE 4-INCH SQUARE GALVANIZED PRESSED STEEL WITH PLASTER RING, MINIMUM 2-1/8 INCHES DEEP. MATCH FINISH OF OTHER PLATES.

2.8 IDENTIFICATION

A. PROVIDE ALL LABELS REQUIRED BY THE NEC.

B. COLOR CODING OF PHASE CONDUCTORS:
1. CONDUCTORS #2 AND SMALLER SHALL BE FACTORY COLOR CODED. CONDUCTORS #1 AND LARGER MAY BE COLOR CODED BY FIELD PAINTING OR COLOR TAPING A 6-INCH LENGTH OF EXPOSED END.
2. PROVIDE THE FOLLOWING COLOR CODING FOR THE A-B-C-N-G-IG PHASE SEQUENCE:
   a. 120/240V, 1-PHASE BLACK, RED, WHITE, GREEN
   b. 120/208V, 3-PHASE BLACK, RED, BLUE, WHITE, GREEN, GREEN/WHITE
   c. 277/480V, 3-PHASE BROWN, ORANGE, YELLOW, GRAY, GREEN/GRAY, GREEN/YELLOW
   d. SWITCH TRAVELERS PINK, PURPLE, AND TURQUOISE
3. WIRING FOR CONTROL SYSTEMS SHALL BE COLOR CODED IN ACCORDANCE WITH THE WIRING DIAGRAMS FURNISHED WITH THE EQUIPMENT.

C. PROVIDE 3/8-INCHES TAPE LABELS ON ALL RECEPTACLES AND SWITCHES THAT INDICATES PANELBOARD AND CIRCUIT NUMBER. LABELS SHALL BE:
1. NORMAL BRANCH BLACK BACKGROUND WITH WHITE LETTERING
2. EQUIPMENT BRANCH ORANGE BACKGROUND WITH BLACK LETTERING
3. LIFE SAFETY RED BACKGROUND WITH BLACK LETTERING
4. STANDBY YELLOW BACKGROUND WITH BLACK LETTERING

D. PROVIDE UPDATED PANEL DIRECTORIES FOR ALL PANELBOARDS AFFECTED BY CONSTRUCTION. TYPE PANEL DIRECTORIES IN ACCORDANCE WITH THE DRAWING PANEL SCHEDULES, INCORPORATE CHANGES THAT WERE MADE IN THE FIELD. LIST WHERE PANEL IS FED FROM; I.E., PANEL AND CIRCUIT BREAKER.

E. PROVIDE LABELING FOR RACEWAYS AND CABLES.
1. POWER-CIRCUIT IDENTIFICATION: METAL TAGS OR ALUMINUM, WRAPAROUND MARKER BANDS FOR CABLES, FEEDERS, AND POWER CIRCUITS IN VAULTS, PULL AND JUNCTION BOXES, MANHOLES, AND SWITCHBOARD ROOMS.
2. CONDUCTORS: INDICATE SOURCE AND CIRCUIT NUMBERS.

F. MULTIPLE POWER OR LIGHTING CIRCUITS IN SAME ENCLOSURE: IDENTIFY EACH CONDUCTOR WITH SOURCE, VOLTAGE, CIRCUIT NUMBER, AND PHASE. USE COLOR-CODING TO IDENTIFY CIRCUITS' VOLTAGE AND PHASE.

2.9 WIRING DEVICES

C. DEVICE PLATES SHALL BE, SCREW-ON, BRUSHED STAINLESS STEEL. EMERGENCY POWER DEVICES SHALL BE RED COLOR. ISOLATED GROUND DEVICES SHALL BE ORANGE COLOR.

D. WALL PLATES IN UNFINISHED SPACES SHALL BE BRUSHED STAINLESS STEEL.

E. DEVICES SHALL BE AS SPECIFIED OR APPROVED EQUAL BY ARROW HART, BRYANT, GENERAL ELECTRIC, HUBBELL, LEVITON, PASS & SEYMOUR, OR SQUARE-D.
1. A-C QUIET OPERATING TYPE SWITCHES, THAT ARE NOT INTEGRAL TO LIGHTING CONTROL SYSTEM, SHALL BE: 120/277V, 20A HUBBELL HBL1221 SERIES, OR APPROVED EQUAL.
2. MOMENTARY-CONTACT LIGHT SWITCHES, THAT ARE NOT INTEGRAL TO LIGHTING CONTROL SYSTEM, SHALL BE 120/277V, 20 AMP, SPDT, NORMALLY-OPEN, CENTER-OFF, THREE-POSITION, HUBBELL CATALOG NO. HBL1557.
3. SPECIFICATION GRADE RECEPTACLES: 20A HUBBELL HBL5362 SERIES. WHERE A SINGLE DEVICE IS INSTALLED ON A BRANCH CIRCUIT THE DEVICE RATING SHALL MATCH THE CIRCUIT BREAKER RATING.
4. SPECIAL PURPOSE RECEPTACLES SHALL BE SPECIFICATION GRADE, STANDARD COLOR, AND OF THE APPROPRIATE CODE AND NEMA CONFIGURATION TO MATCH THE SUPPLY CIRCUIT AND LOAD INVOLVED.
5. HOSPITAL GRADE RECEPTACLES: 20A HUBBELL HBL8300 SERIES, OR APPROVED EQUAL.
6. GFCI RECEPTACLES: 20A HUBBELL GF20 SERIES.

PART 3 – INSTALLATION

3.1 GENERAL

A. PROVIDE ALL CORE DRILLING, CHANNELING, CUTTING, PATCHING, AND SLEEVES REQUIRED FOR INSTALLATION OF ELECTRICAL EQUIPMENT. SEAL HOLES, FIREPROOF WHERE NECESSARY, AND REFINISH ALL WORK TO ORIGINAL CONDITION WHERE DAMAGED BY ELECTRICAL WORK.

B. PROVIDE HANGERS AND SUPPORTS FOR EQUIPMENT, RACEWAYS, AND CABLES, INCLUDING WEIGHT OF WIRE IN RACEWAYS.

C. USE STEEL MATERIAL FOR DRY LOCATIONS.

D. PAINT ALL EXPOSED CONDUIT, SUPPORTS, BOXES, ETC., TO MATCH SURROUNDING CEILING AND WALLS.

E. CLEAN THE AREA AFTER WORK IS COMPLETED, AND AT THE END OF EACH WORK DAY.

F. DO NOT USE CEILING GRID SUPPORT WIRES TO SUPPORT CONDUIT.

G. PRESERVE AND PROTECT USABLE CONDITION OF ALL EQUIPMENT TO BE REMOVED AND REINSTALLED. REPLACE ANY EQUIPMENT DAMAGED AS A PART OF THIS WORK.

H. PROVIDE ALL CUTTING AND PATCHING NECESSARY FOR THE WORK. PATCH AND PAINT DAMAGED SURFACES TO MATCH EXISTING CONDITIONS DUE TO DEMOLITION AND DAMAGE CAUSED DURING WORK.

3.2 CONDUIT LOCATIONS:

A. PROVIDE ELECTRICAL METALLIC TUBING (EMT) FOR ALL DRY, ABOVE GRADE OR ABOVE FLOOR APPLICATIONS IN ACCORDANCE WITH THE NEC.

B. PROVIDE FLEXIBLE METAL CONDUIT FOR CONNECTIONS TO LAY-IN TYPE LUMINAIRES, MOTOR AND EQUIPMENT CONNECTIONS IN DRY CONDITIONS, AND IN ENVIRONMENTAL AIR PLENUMS.

3.3 RACEWAYS

A. ROUTE ALL CONDUIT PARALLEL OR PERPENDICULAR WITH THE BUILDING WALLS. SUPPORT CONDUIT AS REQUIRED BY THE NEC. INSTALL GROUPED CONDUIT USING SWEEPS STRUCK FROM THE SAME RADIUS. PERFORM WORK BY SKILLED TRADESMEN USING THE BEST STANDARD PRACTICES OF THE TRADE.

B. CONCEAL ALL CONDUITS IN FINISHED AREAS. MINIMUM CONDUIT SIZE 3/4 INCHES.

C. UNLESS INDICATED OTHERWISE, ENCLOSE ALL CONDUCTORS IN CONDUIT SIZED IN ACCORDANCE WITH THE NEC.

D. PROVIDE SUPPORTS AND HANGARS FOR A GOOD AND SUBSTANTIAL INSTALLATION. SUPPORT CONDUIT AND RACEWAY IN ACCORDANCE WITH THE NEC. SUPPORT RACEWAYS, LUMINAIRES, CABINETS, BOXES, ETC., ON APPROVED TYPES OF TRAPEZE HANGERS OR WALL BRACKETS. PROVIDE MINIMUM 3/8-INCH STEEL HANGER RODS SECURELY FASTENED TO THE BUILDING STRUCTURE FOR ALL TRAPEZES. PROVIDE FASTENERS SUCH AS "CADDY CLIPS" OR SIMILAR TYPE OF OTHER MANUFACTURER. DO NOT SUSPEND FROM MECHANICAL PIPING OR DUCTWORK OR FROM CEILING SUSPENSION WIRE. PERFORATED PLUMBER'S STRAPS OR WIRE ARE NOT PERMITTED.

E. MAKE ALL BENDS USING AN APPROVED BENDING TOOL AND REAM ALL CUTS TO REMOVE BURRS. CLEAN AND DRY ALL CONDUITS PRIOR TO PULLING CONDUCTORS.

F. SEAL ALL FIREWALL AND FLOOR PENETRATIONS WITH APPROPRIATE SEALANT AT BOTH SIDES AFTER INSTALLATION OF CONDUITS.

G. USE STEEL COMPRESSION FITTINGS THROUGHOUT; DIE CAST ZINC FITTINGS ARE PROHIBITED.

H. IN EACH CONDUIT WITHOUT CONDUCTORS, PROVIDE A NYLON PULLING CORD WITH A TAG IDENTIFYING THE LOCATION OF THE OPPOSITE END.

I. PAINT ALL EXPOSED CONDUIT, SUPPORTS, BOXES, ETC. TO MATCH SURROUNDING CEILING AND WALLS.

J. PROVIDE EXPANSION TYPE FITTINGS FOR ALL CONDUITS WHICH CROSS EXPANSION JOINTS.

K. PROVIDE BUSHING ON ALL CONDUITS STUBBED ABOVE THE CEILING.

L. PROVIDE ALL REQUIRED PULL BOXES AND JUNCTION BOXES. SIZE BOXES IN ACCORDANCE WITH THE NEC.

M. AVOID PROXIMITY OF CONDUIT TO SOURCES OF HEAT SUCH AS FLUES AND HOT WATER LINES.

3.4 CONDUCTORS

A. ROUTE ALL CONDUCTORS THROUGH RACEWAY REGARDLESS OF VOLTAGE APPLICATION, UNLESS SPECIFIED OTHERWISE.

B. UNLESS OTHERWISE INDICATED, ALL WIRING FOR BRANCH CIRCUITS SHALL BE #12 AWG PROTECTED BY 20A CIRCUIT BREAKERS. TO ACCOUNT FOR VOLTAGE DROP, INCREASE CONDUCTOR SIZE FOR ALL 120V CIRCUITS OVER 75 FEET, AND ALL 277V CIRCUITS OVER 150 FEET. PROVIDE UNIFORM CONDUCTOR SIZE FOR THE ENTIRE LENGTH OF THE CIRCUIT UNLESS NOTED OTHERWISE. HOMERUNS THAT INDICATE UPGRADING CIRCUIT CONDUCTORS FOR VOLTAGE DROP, E.G., #10 AWG WIRE ON 20A CIRCUIT, SHALL HAVE THE INDICATED CONDUCTOR SIZE CARRIED THROUGHOUT THE CIRCUIT TO ALL JUNCTION BOXES UP TO AND INCLUDING THE J-BOX NEAREST THE LAST DEVICE OR OUTLET.

C. DO NOT SPLICE FEEDERS OR DEDICATED BRANCH CIRCUITS UNLESS OTHERWISE INDICATED. INSTALL ALL WIRE CONTINUOUS FROM OUTLET TO OUTLET AND TERMINAL TO TERMINAL. PROVIDE SPLICES IN CABLES WHEN REQUIRED UTILIZING SOLDERLESS CONNECTORS IN HANDHOLES, PULL BOXES, OR JUNCTION BOXES. MAKE UP SPLICES IN OUTLET BOXES WITH 8 INCHES OF CORRECTLY COLOR-CODED TAILS LEFT IN BOX. MAKE SPLICES IN WIRES SIZE #8 AWG AND SMALLER WITH INSULATED SPRING TYPE WIRE CONNECTORS, "SCOTCHLOK." MAKE SPLICES IN LARGER WIRE AND CABLES WITH INDENT CONNECTORS. ALL INSULATING TAPE USED ON CIRCUITS OF 600V AND LESS SHALL BE 3-M #88 OR PLYMOUTH SLIPKNOT GREY.

D. MAKE CONNECTIONS, SPLICES, TAPS AND JOINTS WITH SOLDERLESS DEVICES, MECHANICALLY AND ELECTRICALLY SECURE. PROVIDE ONLY APPROVED CONNECTORS IN WET OR DAMP AREAS.

E. INSTALL COMPRESSION CONNECTORS WITH HYDRAULIC DIE, EMBOSSING DIE CODE INTO CONNECTOR. CONNECT TO BUS WITH BELLEVILLE TYPE WASHERS FOR POSITIVE PRESSURE OVER COMPLETE CONTACT AREA. INSULATE WITH 600V HEAT SHRINK HEAVY-WALL CABLE SLEEVES.

F. INSTALL WIRING FOR CONTROL SYSTEMS IN CONJUNCTION WITH MECHANICAL AND MISCELLANEOUS EQUIPMENT.

G. MAKE ALL GROUND, NEUTRAL, AND LINE CONNECTIONS TO RECEPTACLE AND WIRING DEVICE TERMINALS BY MEANS OF THE SIDE TERMINAL SCREW CONNECTIONS. DO NOT TERMINATE BRANCH CONDUCTORS TO THE DEVICE WITH BACKSIDE "PUSH-IN" CONNECTORS. PROVIDE GROUND JUMPER FROM OUTLET BOX TO GROUND TERMINAL OF RECEPTACLE.

3.5 GROUNDING

A. PROVIDE ALL BONDING JUMPERS AND WIRE, GROUNDING BUSHINGS, CLAMPS, FOR COMPLETE GROUNDING. INSTALL COMPLETE GROUNDING SYSTEM IN ACCORDANCE WITH NEC AND AS INDICATED.

B. BOND CONDUIT SYSTEMS, SUPPORTS, CABINETS, EQUIPMENT, METALLIC CABLE TRAYS, INTERIOR METAL PIPING SYSTEMS, VENT STACKS, AND METAL AIR DUCTS TO EQUIPMENT GROUNDING CONDUCTORS OF ASSOCIATED PUMPS, FANS, BLOWERS, ELECTRIC HEATERS, AND AIR CLEANERS. BOND ALL HEATING AND VENTILATION DUCT RUNS CONTAINING FLEXIBLE JOINTS IN A MINIMUM OF TWO PLACES WITH BRAIDED-TYPE BONDING STRAPS AND GROUNDING LUGS. PROVIDE CONNECTIONS WITH A MACHINE SCREW, HEX NUT, AND LOCK WASHERS.

C. GROUND CONNECTIONS SHALL HAVE CLEAN CONTACT SURFACES, TINNED AND SWEATED WHILE BOLTING.

D. INSTALL ALL GROUND CONDUCTORS IN CONDUIT. PROVIDE A SEPARATE INSULATED GROUND CONDUCTOR IN ALL FEEDERS AND BRANCH CIRCUITS.

E. PROVIDE A GROUND BUS IN ALL DISTRIBUTION EQUIPMENT, AND BRANCH-CIRCUIT PANELBOARDS.

F. PROVIDE EXOTHERMIC WELDS, IF REQUIRED, BY CADWELD, OR THERMOWELD[, OR] APPROVED EQUAL).

G. ROUTE GROUNDING CONDUCTORS TO PERMIT, AS FAR AS PRACTICABLE, THE SHORTEST AND MOST DIRECT PATH TO THE GROUND GRID SYSTEM.

H. PROVIDE ALL GROUND CONNECTIONS TO EQUIPMENT OR STRUCTURE WITH SOLDERLESS CONNECTORS BOLTED TO THE EQUIPMENT OR STRUCTURE. UNLESS INDICATED OTHERWISE, EXOTHERMICALLY WELD ALL GROUNDING TAPS AND CONNECTIONS TO COLUMNS AND REINFORCING STEEL. BRAZE CONNECTIONS TO WIRE MESH, AND METAL DUCTS.

I. IN ADDITION TO THE EQUIPMENT GROUND CONDUCTOR, GROUND ALL MOTOR FEEDERS AND MAIN FEEDERS THROUGH THE CONDUIT SYSTEM WITH A GROUNDING BUSHING AT EACH END. DIRECTLY BOND THE FRAMES OF STATIONARY MOTORS TO LOCAL STEEL OR THE LOCAL GROUND GRID.

3.6 BOXES

A. LOCATE OUTLET BOXES SO THAT TRANSMISSION OF SOUND THROUGH COMMON WALLS WILL NOT OCCUR.

B. EXCEPT WHERE INDICATED OTHERWISE, MOUNT DEVICES IN ACCORDANCE WITH THE FOLLOWING:
1. CONVENIENCE RECEPTACLES: LONG AXIS VERTICALLY 18-INCHES AFF
2. LIGHT SWITCHES: 44-INCHES AFF
3. STANDARD VOICE/DATA: LONG AXIS VERTICALLY 18-INCHES AFF
4. VOICE/DATA OUTLET MARKED AS WALL: 44-INCHES AFF

C. PROVIDE A GANG TYPE BOX WITH A GANG TYPE COVER WHERE TWO OR MORE SIMILAR TYPE DEVICES OCCUR ADJACENT TO EACH OTHER. WHERE DIFFERENT TYPE DEVICES OCCUR ADJACENT TO EACH OTHER, SPACE OUTLET BOXES SO THAT FINISH PLATES WILL BE SPACED 1 INCH APART.

D. MOUNT TELEPHONE OUTLETS AT THE SAME HEIGHT AS ADJACENT RECEPTACLE OUTLETS, UNLESS NOTED OTHERWISE.

E. DO NOT USE "BACK-TO-BACK" OUTLETS IN THE SAME WALL, OR "THRU-WALL" TYPE BOXES. PROVIDE (MINIMUM) 12-INCH-LONG NIPPLE TO OFFSET ALL OUTLETS SHOWN ON OPPOSITE SIDES OF A COMMON WALL TO MINIMIZE SOUND TRANSMISSION.

F. PROVIDE SUITABLE BARRIERS TO SEPARATE SWITCH TERMINALS EXCEEDING 300V.

G. PROVIDE PULL BOXES IN RACEWAY RUNS IN ACCESSIBLE LOCATIONS, AS REQUIRED BY NEC AND JOB CONDITIONS.

H. RIGIDLY INSTALL PULL BOXES TO PROPERLY COMPLETE THE SYSTEMS, AND IN THE LOCATIONS AS SHOWN ON THE DRAWINGS. IF REQUIRED BY THE OWNER, AHJ, OR ENGINEER, OPEN BOX COVERS FOR INSPECTION.

END OF SECTION 26 00 10S

University of Colorado Anschutz Medical Campus

University of Colorado Anschutz Medical Campus

Fitzsimons Building CRIO Renovation

CANNONDESIGN
2800 Walnut Street, Suite 300
Denver, CO 80205
P: 303.893.1990

www.cannondesign.com

RMH Group, Inc.
Mechanical / electrical & Plumbing Engineers
12600 West Colfax Avenue, Suite A-400
Lakewood, Colorado 80215
303.239.0909

COLORADO LICENSED CHARLES P BASIL 55143 03/22/2022 PROFESSIONAL ENGINEER

Rev.	Description	Date
	100% CONSTRUCTION DOCUMENTS	22 MAR 2022

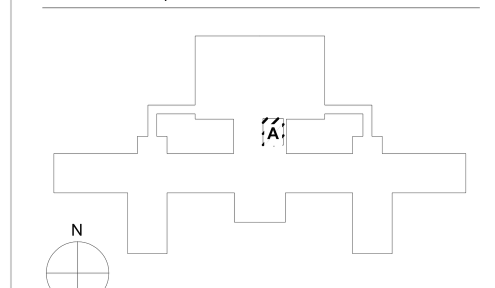

KEY PLAN

Drawing Title:

ELECTRICAL SPECIFICATIONS

Project No.: 006734.00 Checked by: Checker

E0001

© 2019 The Cannon Corporation.

© 2019 The Cannon Corporation
All rights reserved. No part of this document may be reproduced or utilized in any form, without prior written authorization by The Cannon Corporation.

11/15/2021 10:25:27 AM

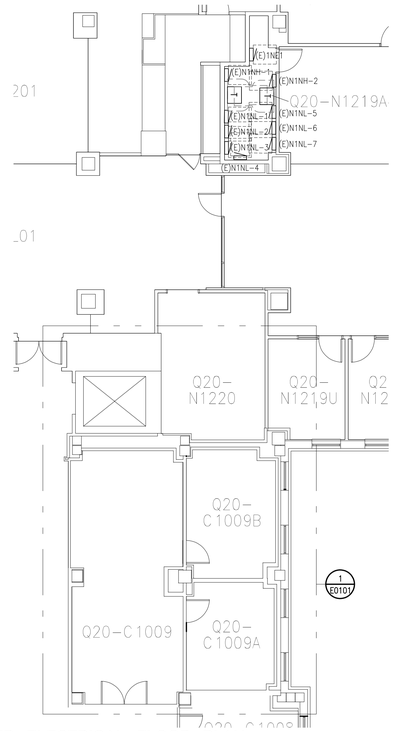

1 E0101 ENLARGED ELECTRICAL FLOOR PLAN
SCALE: 1/8"=1'-0"

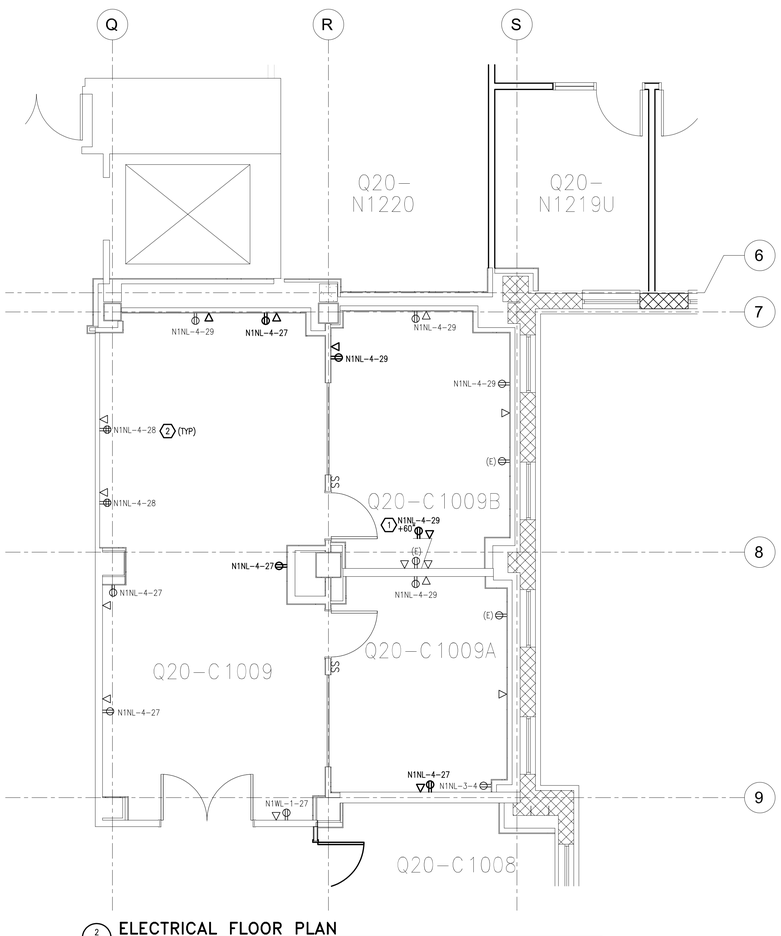

2 E0101 ELECTRICAL FLOOR PLAN
SCALE: 1/4"=1'-0"

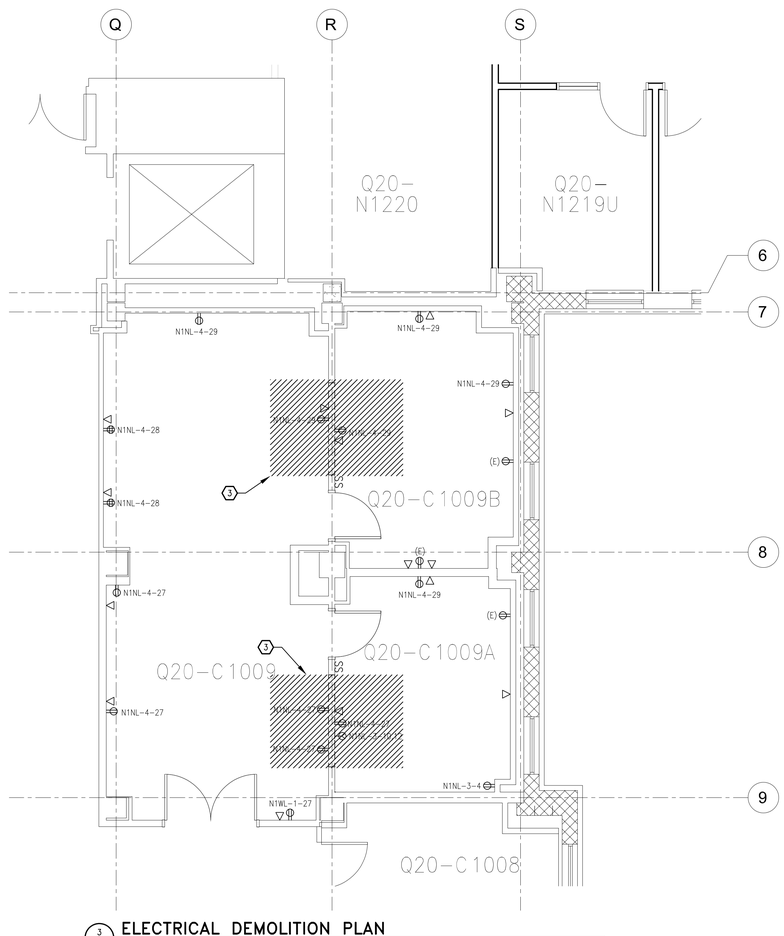

3 E0101 ELECTRICAL DEMOLITION PLAN
SCALE: 1/4"=1'-0"

SHEET NOTES

1. LIGHT LINE WEIGHT INDICATES EXISTING. HEAVY LINE WEIGHT INDICATES NEW CONSTRUCTION. HATCHING INDICATES DEMOLITION.
2. PATCH AND PAINT ANY DAMAGED SURFACES DUE TO DEMOLITION AND CONSTRUCTION TO MATCH EXISTING CONDITIONS. SEAL ALL PENETRATIONS THROUGH RATED CEILINGS AND WALLS WITH UL LISTED SEALANTS AND FIRESTOPPING MATERIALS.
3. UPDATE PANEL SCHEDULES TO REFLECT INSTALLED CONDITIONS AFTER CONSTRUCTION IS COMPLETE.
4. EXISTING CIRCUIT INFORMATION SHOWN ON THE PLANS IS FOR REFERENCE ONLY. TRACE ALL EXISTING CIRCUITS AFFECTED BY THIS WORK TO CONFIRM SOURCE PANEL AND CIRCUIT NUMBERS.
5. THESE DRAWINGS HAVE BEEN PREPARED BASED ON INFORMATION PROVIDED BY OTHERS. DATA PRESENTED ON THIS DRAWING IS AS ACCURATE AS CAN BE DETERMINED, BUT ACCURACY IS NOT GUARANTEED. WHILE THIS INFORMATION IS BELIEVED TO BE RELIABLE, THE ENGINEER IS NEITHER RESPONSIBLE FOR ITS ACCURACY, NOR ERRORS NOR OMISSIONS WHICH MAY HAVE BEEN INCORPORATED INTO THESE DOCUMENTS. FIELD VERIFICATION OF ALL AFFECTED COMPONENTS IS REQUIRED.
6. NO ADDITIONAL ELECTRICAL LOAD ADDED IN THE SCOPE OF THIS PROJECT. 900VA REMOVED FROM PANEL N1NL-4 AND 900VA ADDED TO PANEL N1NL-4.

KEY NOTES

1. PROVIDE A CHIEF MANUFACTURING PAC-525/526 RECESSED LCD DISPLAY BOX FOR RECEPTACLE, A/V AND DATA DEVICES. MOUNT AS CLOSE AS POSSIBLE TO CENTERLINE OF LCD SCREEN TO AVOID CONFLICT WITH TV MOUNT. COORDINATE FINAL MOUNTING HEIGHT WITH THE OWNER'S REPRESENTATIVE PRIOR TO ROUGH-IN.
2. PANELBOARD NAMES WERE CHANGED AFTER THE DEVICES WERE LABELED. SEE ONE-LINE DIAGRAM FOR PREVIOUS AND CURRENT PANELBOARD NAMES.
3. WORK SHOWN HATCHED IS EXISTING TO BE REMOVED. REMOVE ALL DEVICES ON WALLS WHICH ARE REMOVED. WHERE DEVICES ARE REMOVED, REMOVE ASSOCIATED CIRCUIT CONDUCTORS TO THE NEXT DEVICE ON THE CIRCUIT WHICH REMAINS (MAINTAIN CIRCUIT CONTINUITY).

University of Colorado Anschutz Medical Campus

University of Colorado Anschutz Medical Campus

Fitzsimons Building CRIO Renovation

CANNONDESIGN
2800 Walnut Street, Suite 300
Denver, CO 80205
P: 303.893.1990

www.cannondesign.com

RMH Group, Inc.
Mechanical / electrical & Plumbing Engineers
12600 West Colfax Avenue, Suite A-400
Lakewood, Colorado 80215
303.239.0909

CO LICENSED PROFESSIONAL ENGINEER
55143
03/22/2022

Rev.	Description	Date
	100% CONSTRUCTION DOCUMENTS	22 MAR 2022

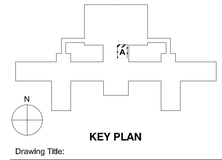

KEY PLAN

Drawing Title:

ELECTRICAL FLOOR PLANS

Project No.: 006734.00 Checked by: Checker

E0101

© 2019 The Cannon Corporation

© 2019 The Cannon Corporation
All rights reserved. No part of this document may be reproduced or transmitted in any form or by any means without prior written authorization by The Cannon Corporation.

C:\Revit Local Files\006734.00_CUAMC_C1_AR_THsieh2H.rvt

11/15/2021 10:25:27 AM

C:\Revit Local Files\006734.00_CUAMC_C1_AR_THsiehCH.rvt

SHEET NOTES

1. ONE-LINE DIAGRAM SHOWN FOR REFERENCE ONLY. NO NEW WORK IS SHOWN ON THIS SHEET.

PANEL: **N1NL-4** VOLTAGE: 120/208 V. TYPE: PANELBOARD
3 PH 4 W. 60 HZ MOUNTING: SURFACE
FED FROM: N1NH-1 PANEL COVER: SURFACE
125 AMP MAIN RATED AT 80% NEUTRAL BUS: YES
N/A AMP MAIN LUGS GROUND BUS: YES ISOLATED GND: NO
125 AMP BUS NOTE: 1. EXISTING LOAD
COPPER BUSING 2. NEW LOAD, NEW CIRCUIT BREAKER
10000 SYMMETRICAL RMS AMPS 3. [ ]
PANEL SHORT CIRCUIT RATING 4. [ ]

NOTE	DESCRIPTION	CCT VA	BREAKER AMF / P	CCT	PH	CCT	BREAKER AMF / P	CCT VA	DESCRIPTION	NOTE
1	CCTV DINNING	180	20 / 1	1	A	2	20 / 1	0	SPARE	
1	HALLWAY HEATERS	1000	20 / 1	3	B	4	20 / 1	0	SPARE	
1	HALLWAY HEATERS	1000	20 / 1	5	C	6	20 / 1	0	SPARE	
	SPACE	0	20 / 1	7	A	8	20 / 1	0	SPARE	
	SPACE	0	/ 1	9	B	10	/ 1	0	SPACE	
	SPACE	0	/ 1	11	C	12	/ 1	0	SPACE	
	SPACE	0	/ 1	13	A	14	/ 1	0	SPACE	
	SPACE	0	/ 1	15	B	16	/ 1	0	SPACE	
	SPACE	0	/ 1	17	C	18	/ 1	0	SPACE	
1	RECEPT	720	20 / 1	19	A	20	/ 1	0	SPACE	
1	RECEPT	540	20 / 1	21	B	22	/ 1	0	SPACE	
1	COPY MACHINE	1500	20 / 1	23	C	24	/ 1	0	SPACE	
1	COPY MACHINE	1500	20 / 1	25	A	26	20 / 1	0	SPARE	
1	RECEPT	1080	20 / 1	27	B	28	20 / 1	720	RECEPT	1
1	RECEPT	1080	20 / 1	29	C	30	20 / 1	0	SPARE	
	N1NL-2	4320	50 / --	31	A	32	20 / 1	0	SPARE	
	"	2700	-- / --	33	B	34	20 / 1	360	RECEPT	1
	"	2340	-- / 3	35	C	36	20 / 1	360	RECEPT	1
	N1NL-3	540	50 / --	37	A	38	90 / --	900	N1NL-1	
	"	540	-- / --	39	B	40	-- / --	1260	"	
	"	720	-- / 3	41	C	42	-- / 3	1800	"	

PANEL LOADING SUMMARY

LOAD TYPE	PH A	PH B	PH C	TOTAL	
INCANDESCENT	0.0	0.0	0.0	0.0	kVA
INDUCTIVE LTG	0.0	0.0	0.0	0.0	kVA
RECEPTACLES	4.9	5.4	4.5	###	kVA
MOTORS	1.8	1.8	1.8	5.4	kVA
APPLIANCES	0.0	0.0	0.0	0.0	kVA
HEAT	0.0	1.0	1.0	2.0	kVA
COMPUTER	0.0	0.0	0.0	0.0	kVA
OTHER	1.5	0.0	1.5	3.0	kVA
NONCOINCIDEN	0.0	0.0	0.0	0.0	kVA
PEAK LOAD	0.0	0.0	0.0	0.0	kVA
TOTAL	8.2	8.2	8.8	###	kVA

PHASE BALANCE	A-B	B-C	C-A	PF
(%)	100	93	93	92

MIN PANEL AMPACITY	69	AMPERES

NEC DEMAND LOAD SUMMARY

LOAD TYPE	kW		POWER FACT		kVA		DEMAND FACTOR		CALCULATED LOAD	
INCANDESCEN	0.0	@	100%	=	0.0	@	125%	=	0.0	kVA
INDUCTIVE LTG	0.0	@	95%	=	0.0	@	125%	=	0.0	kVA
RECEPTACLES										
FIRST 10 kVA	9.5	@	95%	=	###	@	100%	=	10.0	kVA
REMAINDER	4.6	@	95%	=	4.8	@	50%	=	2.4	kVA
MOTORS										
LARGEST	4.3	@	80%	=	5.4	@	125%	=	6.8	kVA
REMAINDER	0.0	@	80%	=	0.0	@	100%	=	0.0	kVA
APPLIANCES	0.0	@	80%	=	0.0	@	100%	=	0.0	kVA
HEAT	2.0	@	100%	=	2.0	@	125%	=	2.5	kVA
COMPUTER	0.0	@	95%	=	0.0	@	100%	=	0.0	kVA
OTHER	2.6	@	85%	=	3.0	@	100%	=	3.0	kVA
NONCOINCIDEN	0.0	@	95%	=	0.0	@	0%	=	-	kVA
PEAK LOAD	0.0	@	90%	=	0.0	@	125%	=	0.0	kVA
0 % SPARE	0.0	@	90%	=	0.0	@	100%	=	0.0	kVA
TOTAL	### kW				### kVA				24.7	kVA

Version 0816a

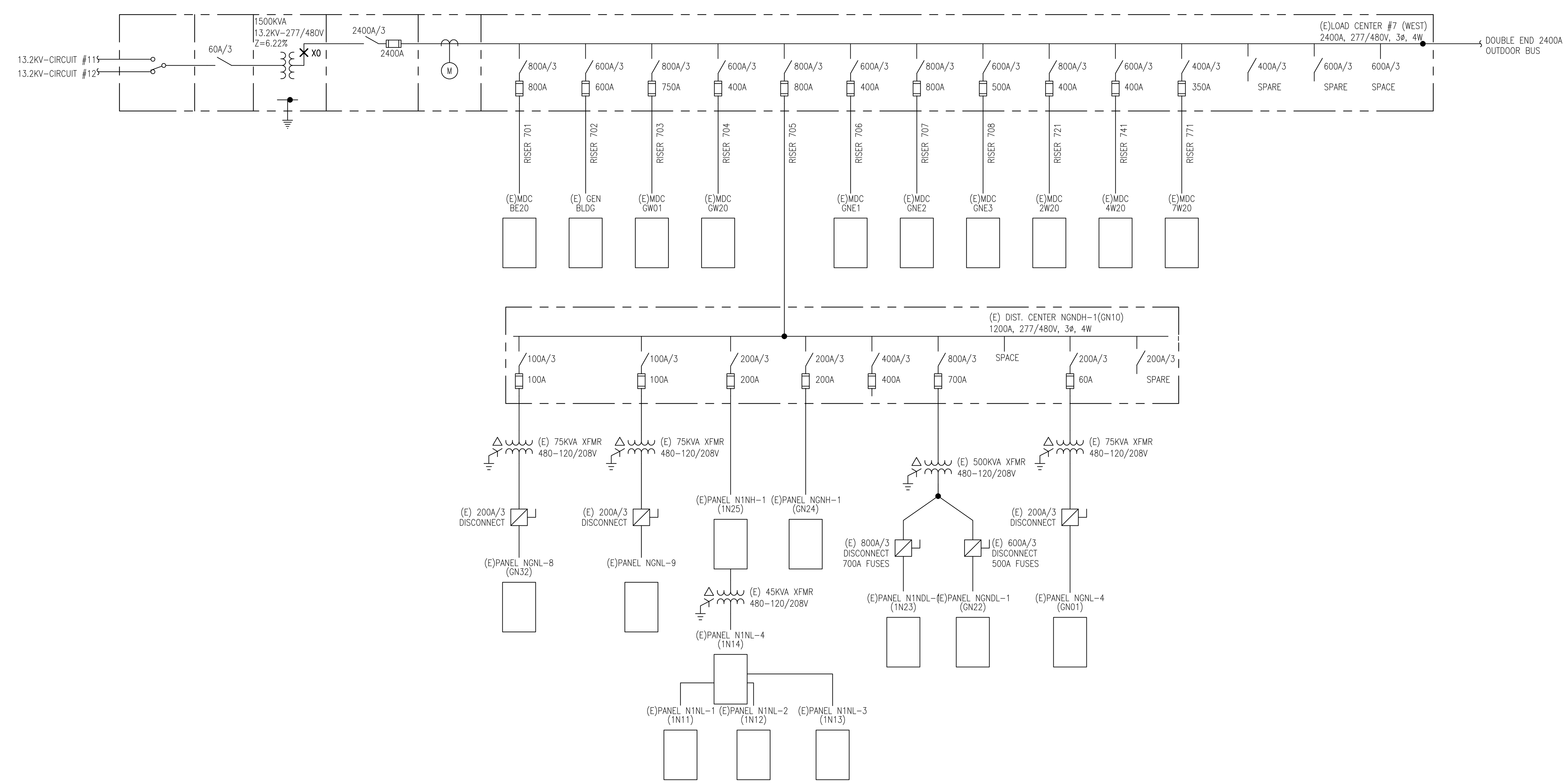

PARTIAL ELECTRICAL ONE-LINE DIAGRAM

SCALE: NONE

University of Colorado
Anschutz Medical Campus

University of Colorado Anschutz Medical Campus

Fitzsimons Building CRIO Renovation

CANNONDESIGN
2800 Walnut Street, Suite 300
Denver, CO 80205
P: 303.893.1990

www.cannondesign.com

RMH Group, Inc.
Mechanical / electrical & Plumbing Engineers
12600 West Colfax Avenue, Suite A-400
Lakewood, Colorado 80215
303.239.0909

55143
03/22/2022

Rev.	Description	Date
	100% CONSTRUCTION DOCUMENTS	22 MAR 2022

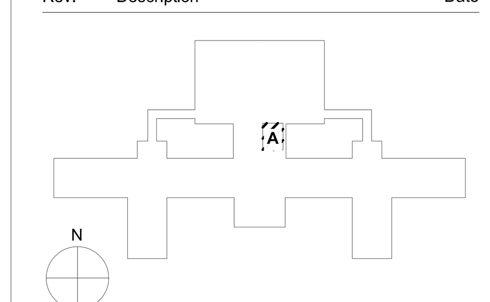

KEY PLAN

Drawing Title:

ELECTRICAL ONE-LINE DIAGRAM

Project No.: 006734.00 Checked by: Checker

E0201

© 2019 The Cannon Corporation.

© 2019 The Cannon Corporation
All rights reserved. No part of this document may be reproduced or utilized in any form, without prior written authorization by The Cannon Corporation.
11/15/2021 10:25:27 AM